# 'Dax' Glass & Holder

**£67.81**

Excl. Tax: **£56.51**

## Product Images

## Short Description

# Chrome plated & frosted glass object holder.

The *Dax* object holder is ideal for storing toothbrushes, razors and other loose objects and is made from solid brass. It is fastened to the the installation surface via a hidden fixing bracket. This neat design ensures that no screw heads or unsightly fixings are visible once installed. Fixings are supplied.

This product is part of the *Dax* family of bathroom accessories which all share a common design language. Please view the related products section below to see the other items availavble in this collection.

## Description

# Product Drawing

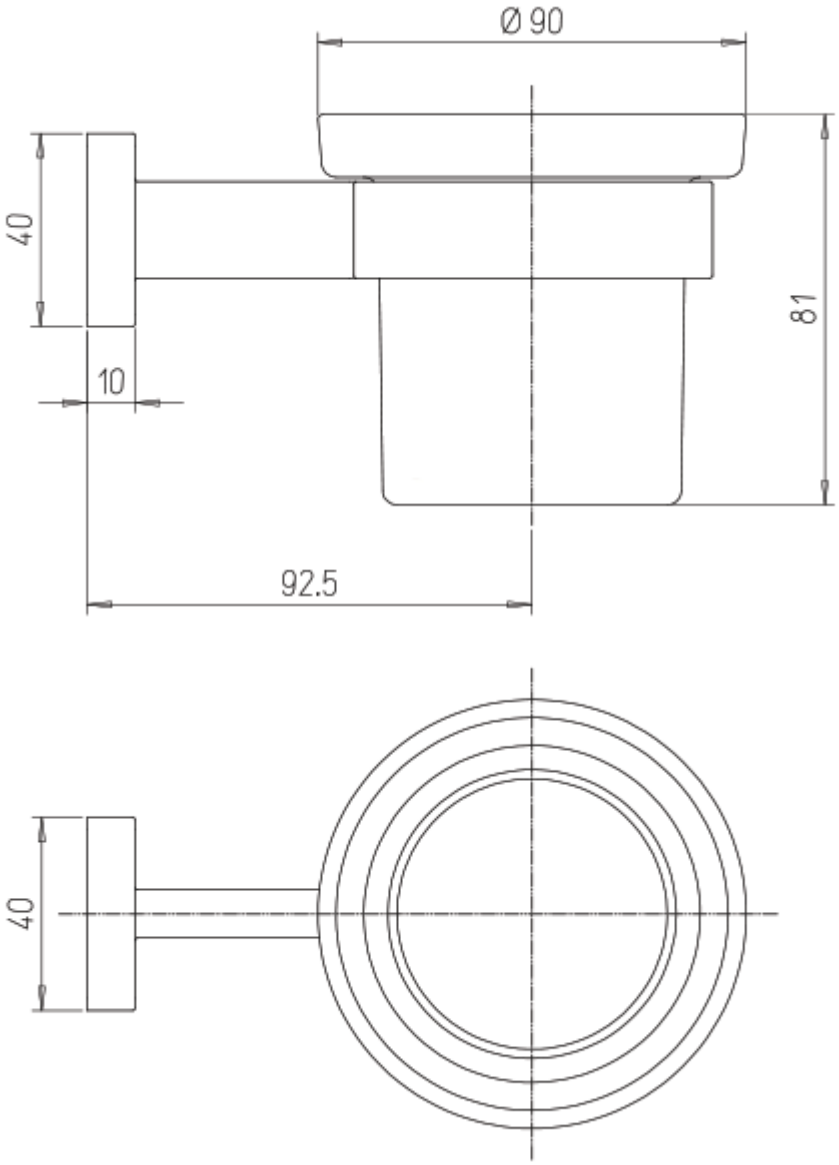


## Additional Information

| | |
|---|---|
| Diameter (mm) | 90.00 |
| Weight (kg) | 0.650000 |
| Manufacturer | Foresti & Suardi |
| Finish | Chrome |
| Depth (mm) | 137.50 |