Plutone T90 Spotlight

From
£156.34
Excl. Tax: **£130.28**

Product Images

Short Description

The Plutone spotlight range contains some of our most advanced LED technology. The Plutone T90 is the largest of the Plutone family and features a powerful 5 watt LED module. The Nichia™ LED chip produces a very high quality LED output with an average colour rendering index of 95. The spotlight is waterproof from both the front and rear and is available in various lens angles and colour temperatures.

- Interior & exterior spotlight with chrome plated bezel
- Excellent anti-glare properties with recessed LED source
- Galvanised brass face, chrome plated
- Custom finishes available on request
- Tempered glass lens
- Anodised aluminium heatsink
- Multiple lens angles available
- Available in numerous white colour temperatures as well as red
- CRI>90

Description

- Drawing
- Product Information
- Photometric Performance

Product Drawing

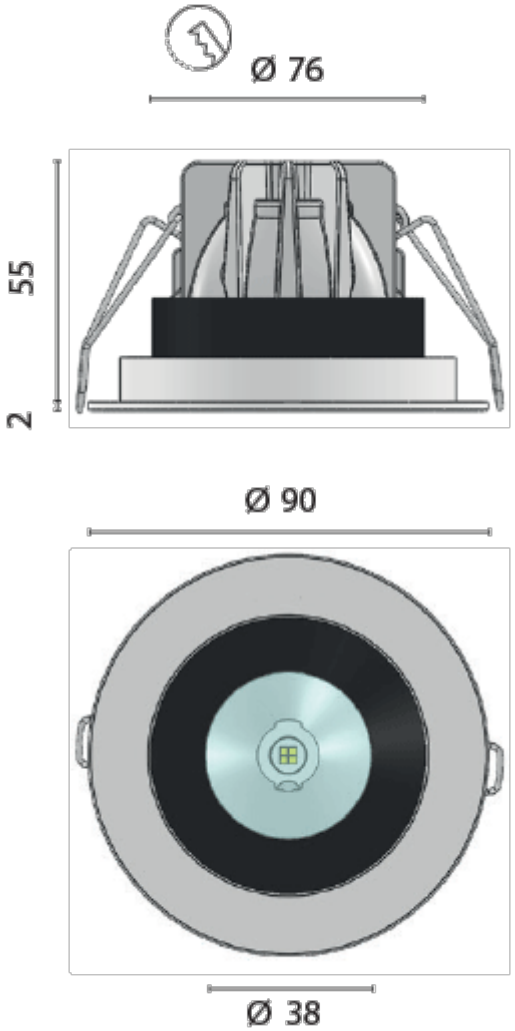

The Plutone spotlight has a deeper recess depth than other low voltage fittings in our range. This is caused in part by the anti-glare recessed light source, which sits deep within the light body, but also by the larger machined aluminium heat sink on the rear of the fitting. The size and performance of this heatsink has been carefully calculated in order to ensure that the LEDs operate at the optimal temperature for ultimate performance and longevity.

The product is secured in place using the spring clips featured on the back of the body. To fit the product, simply make the electrical connection, retract the springs and insert the fitting into the cut-out. Release the springs carefully and allow the fitting to be pulled into position within the hole cut-out. This spring fit method offers an anti-vibration solution and a fast removal of the product for maintenance.

The Ultimate Low Voltage Spotlight

The Plutone spotlight range features the latest Nichia™ LED chip technology with a colour rendering index (CRI) of over 95. Available in a number of different lens angles and colour temperatures, the Plutone model offers a very high-end downlight solution for those seeking the very best.

Colour Rendering Index

Colour rendering index, more commonly referred to as CRI, is a quantitive measure of the ability of a light source to display the true colours of various objects in comparison to a natural light source such as daylight. The CRI of a light source does not indicate the colour of the light, this is referred to by the correlated colour

temperature of a product commonly in Kelvin. The highest possible CRI of a luminaire is 100, which would be given to a fitting with a light source of the same spectrum as daylight.

Our Nichia™ chip fittings, have a published CRI of >90. In reality, the average CRI of our fittings has been laboratory tested at 95. This means that our LED down lights will bring out the very best in the fabrics, veneers and other finishes that they illuminate, revealing close to their true colours. The fittings become a key part of the interior design.

Separate Power Regulation

Our fittings offer a 10-30Vdc input. This is designed to make installation very straight forward for 12 or 24Vdc circuits such as those found on board a yacht. The 30Vdc upper limit also provides a level of security if a voltage spike were to occur. The separate voltage regulator mounted on the cable of the fitting regulates this input voltage and feeds the luminaire with the current required depending on the circuit board used. For those looking to fit the luminaires to a mains voltage 220-240 Vac circuit, a choice can be made between running the fitting on a 12Vdc or 24Vdc constant voltage power supply or, alternatively, powering the fitting directly with current following the safe removal of the regulator. The provides the best possible flexibility for those choosing our fittings, allowing them to be integrated in a wider variety of lighting schemes and powered accordingly.

Photometric Data

Narrow - 14

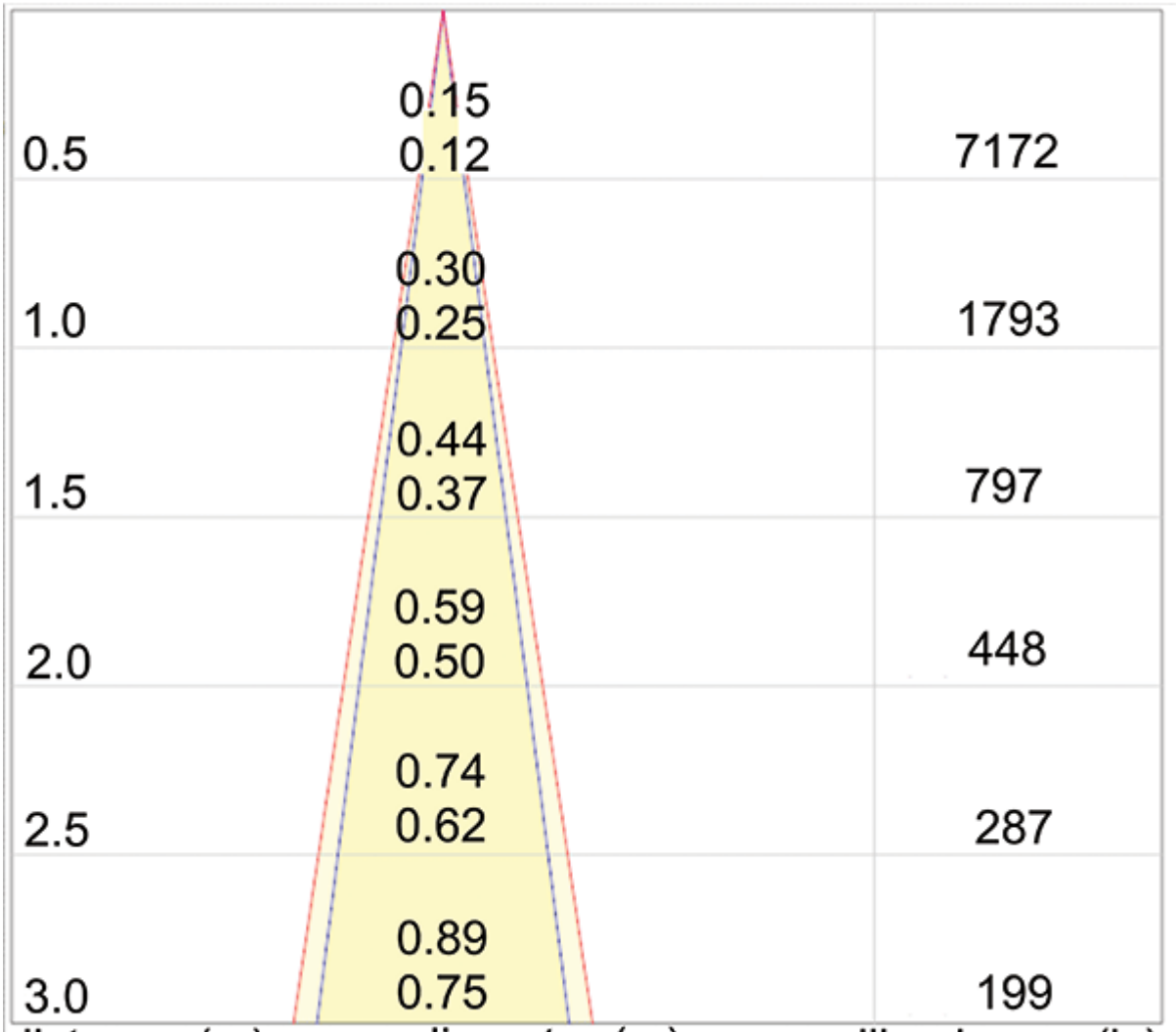

distance (m)	cone diameter (m)	illuminance(lx)
0.5	0.15 0.12	7172
1.0	0.30 0.25	1793
1.5	0.44 0.37	797
2.0	0.59 0.50	448
2.5	0.74 0.62	287
3.0	0.89 0.75	199

Narrow - 14°

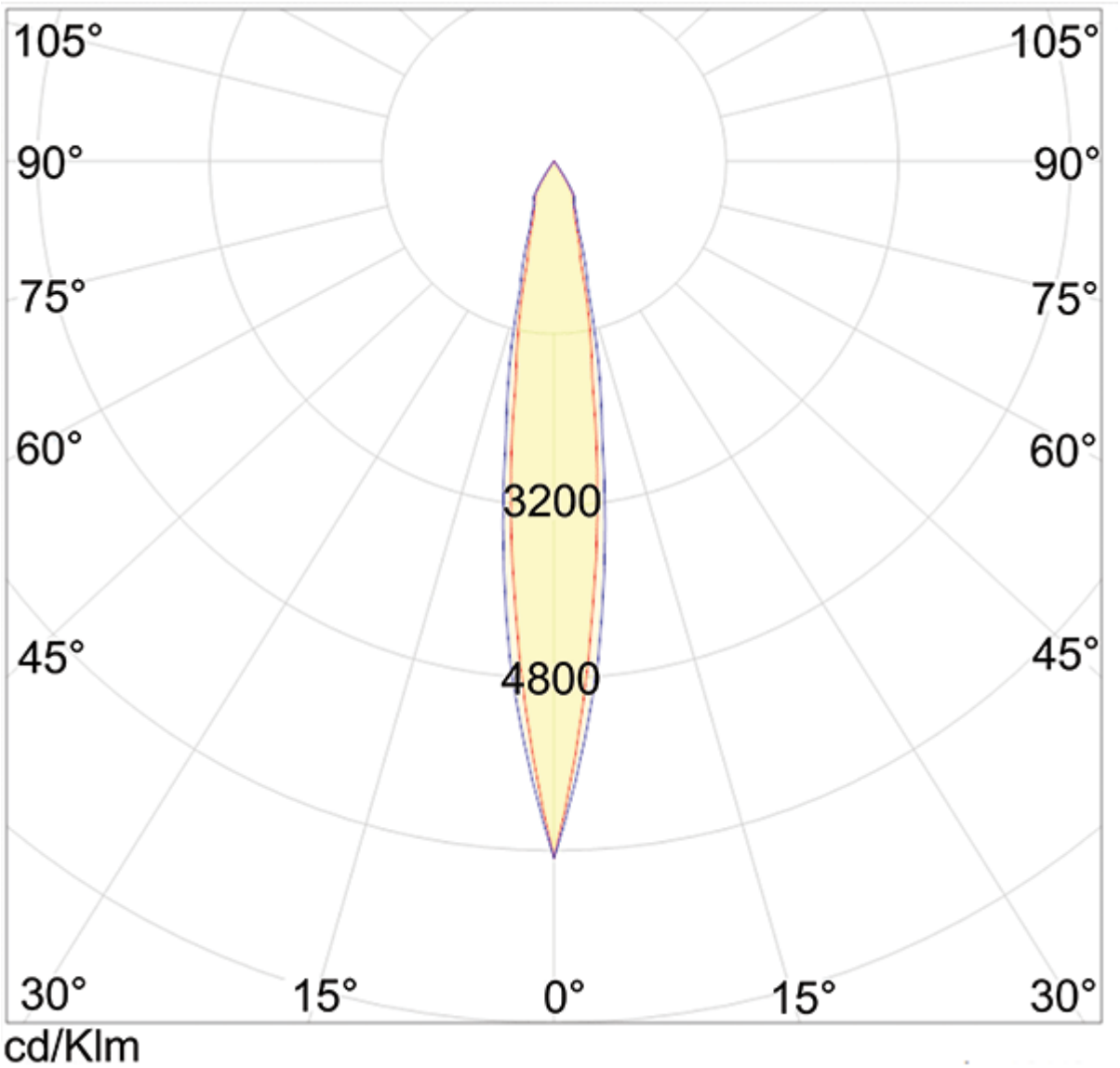

Standard - 44

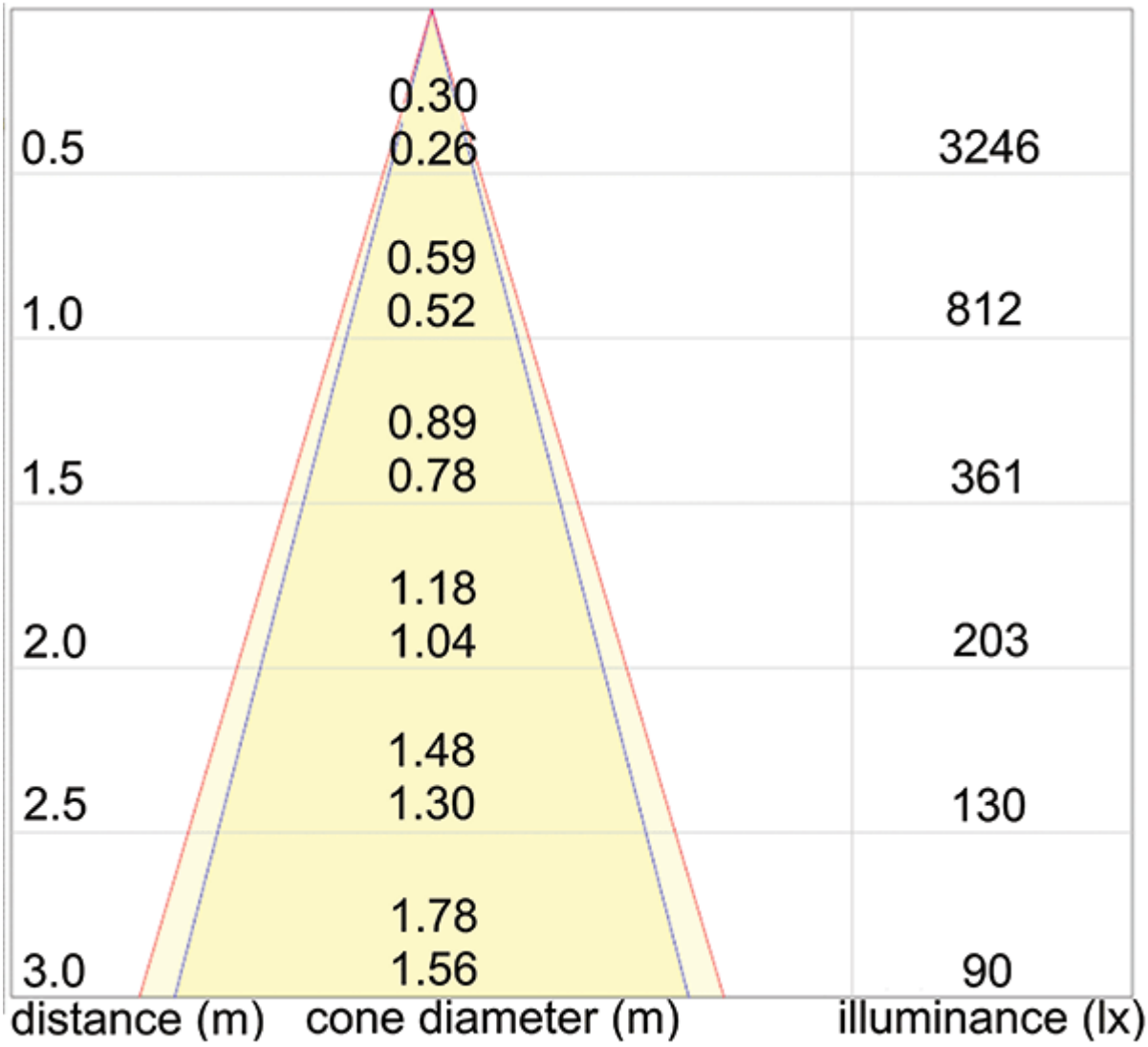
0.30
0.5
0.26
3246
0.59
1.0
0.52
812
0.89
1.5
0.78
361
1.18
2.0
1.04
203
1.48
2.5
1.30
130
1.78
3.0
1.56
90
distance (m)
cone diameter (m)
illuminance (lx)

Standard 44

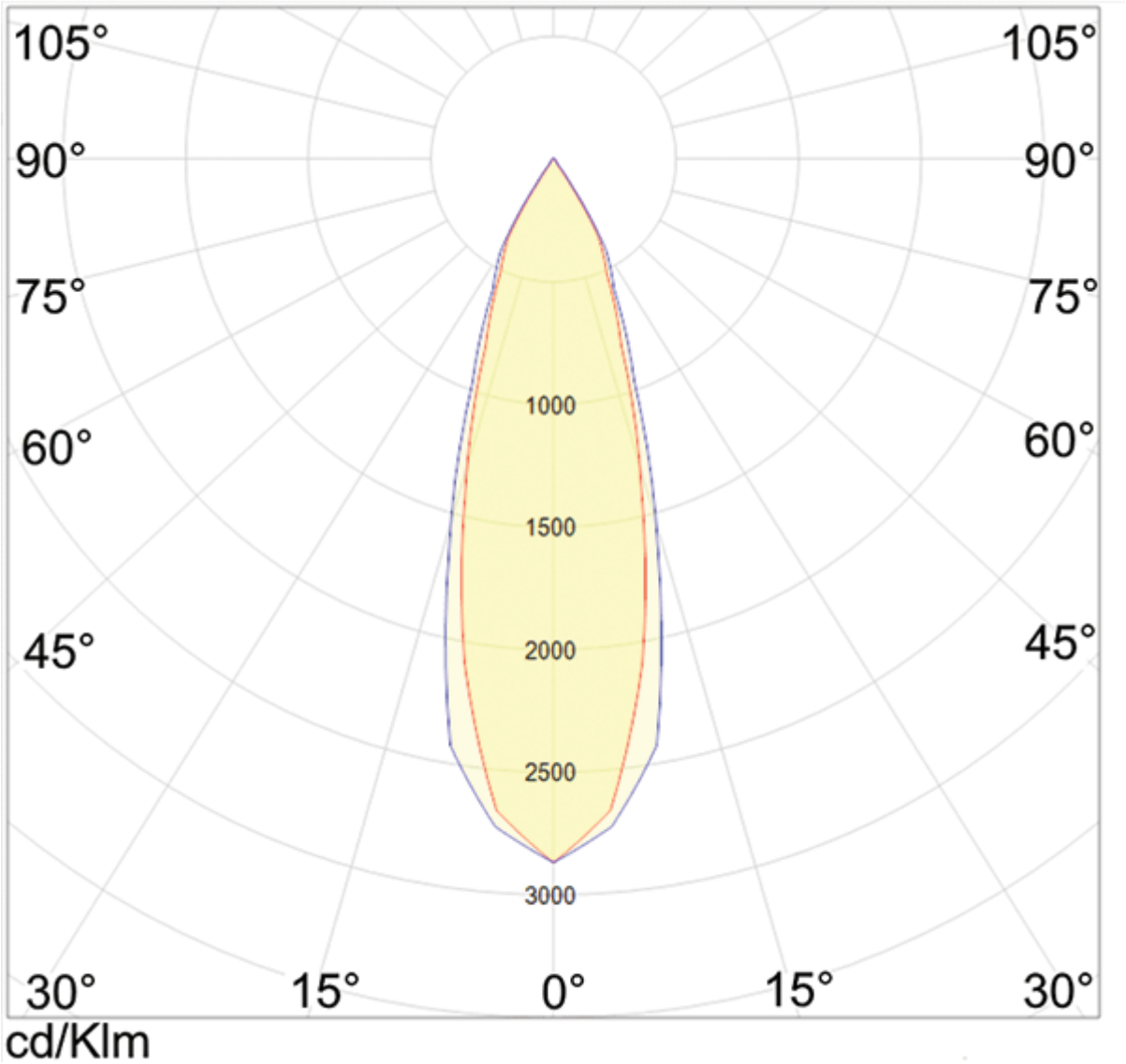
105°
105°
90°
90°
75°
75°
60°
60°
45°
45°
1000
1500
2000
2500
3000
30°
15°
0°
15°
30°
cd/Klm

Medium - 29

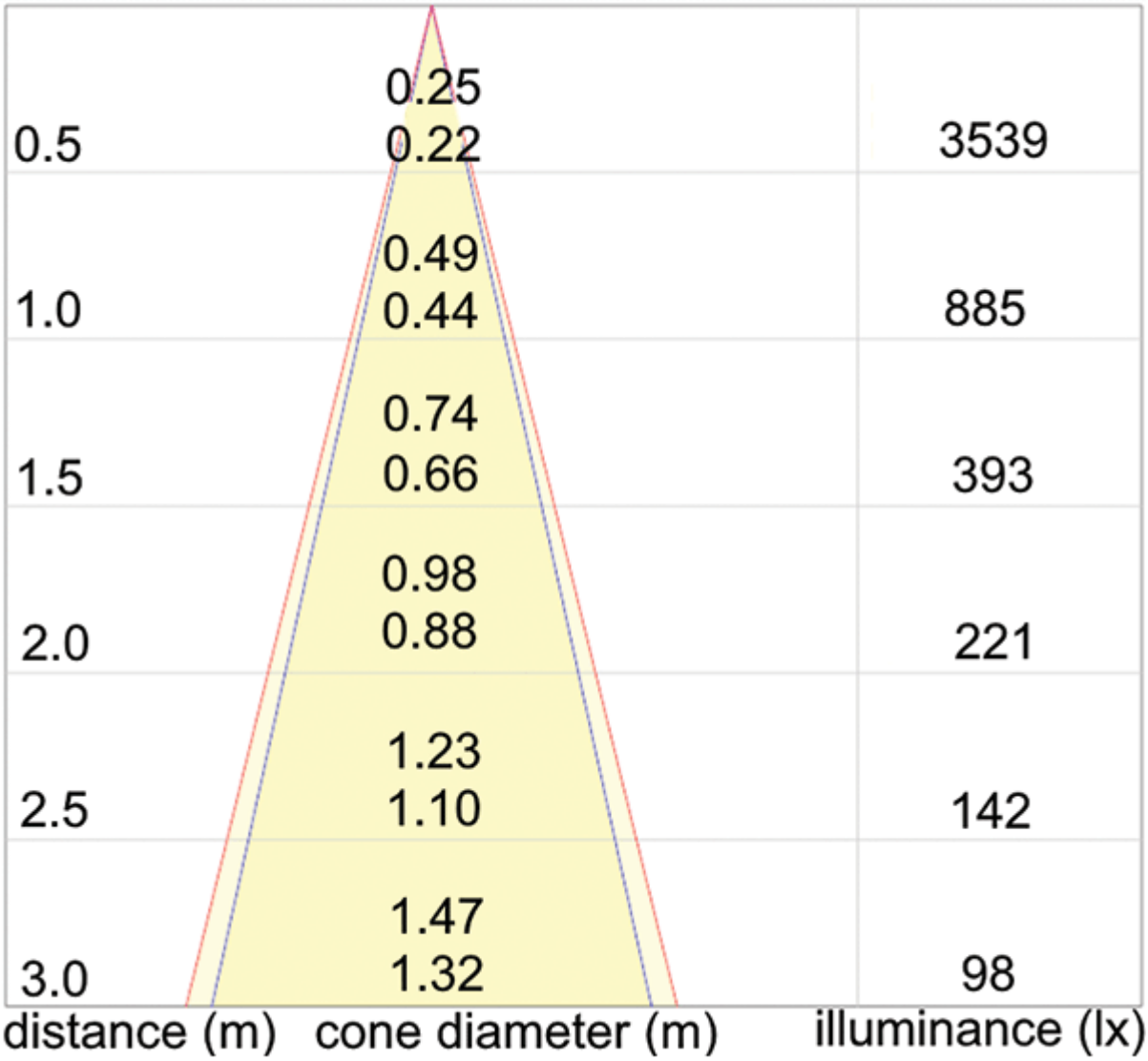
0.25
0.5
0.22
3539
0.49
1.0
0.44
885
0.74
1.5
0.66
393
0.98
2.0
0.88
221
1.23
2.5
1.10
142
1.47
3.0
1.32
98
distance (m)
cone diameter (m)
illuminance (lx)

Medium - 29°

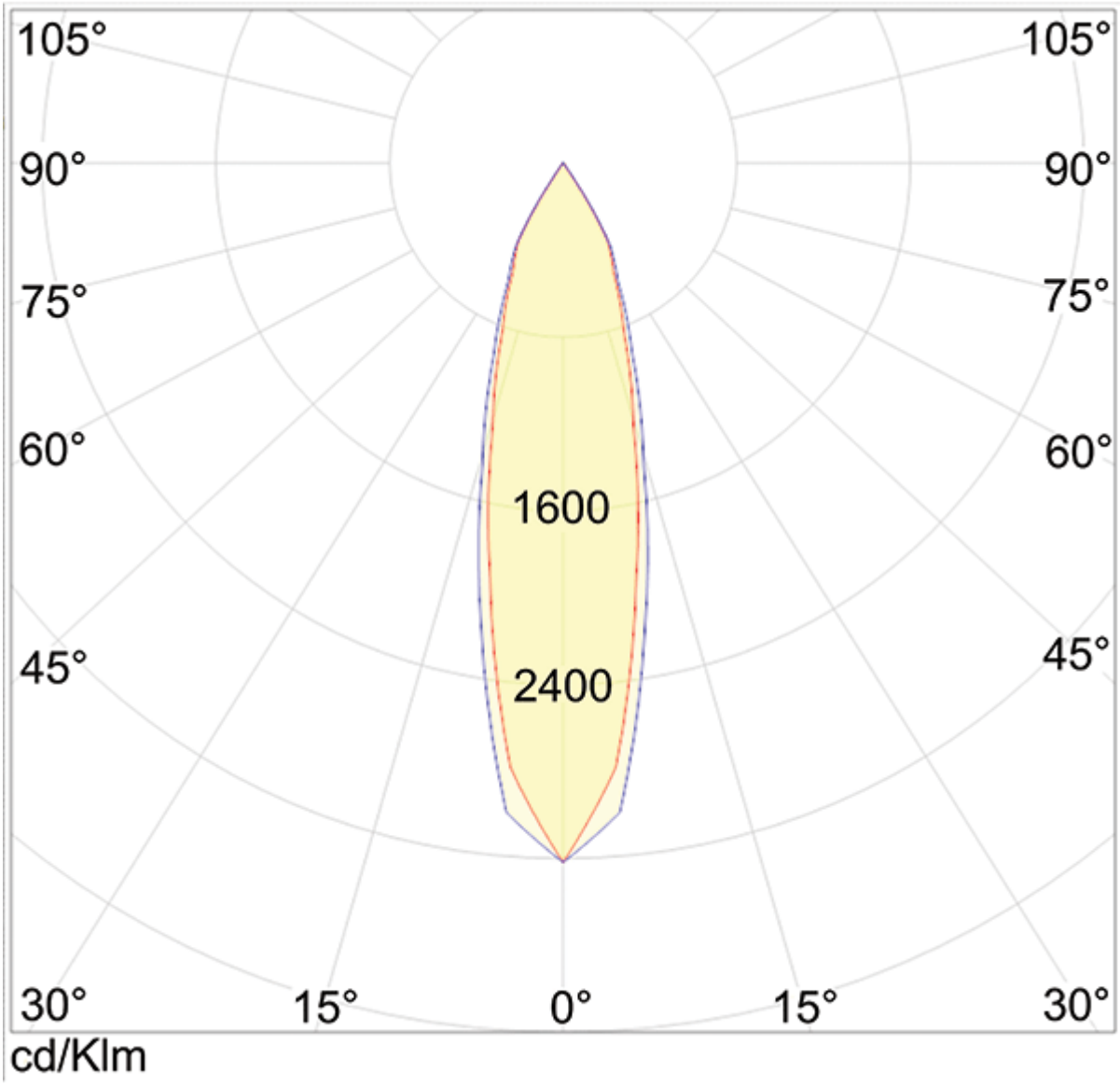
105°
105°
90°
90°
75°
75°
60°
60°
1600
45°
45°
2400
30°
15°
0°
15°
30°
cd/Klm

Additional Information

Weight (kg)	0.300000
Manufacturer	Foresti & Suardi
Installation	Recessed
Light Element Type	Power LED
Lux Level at 1 Metre	812.00
Lumens	283.00
Lumens Per Watt (Lm)	56.60
Wattage	5W
CRI	>90
Input Voltage	10-30Vdc
IP Rating	IP65
Dimmer	Yes
Bezel Size (mm)	Ø90.00
Cut-out Size (mm)	Ø76.00
Depth (mm)	55.00
Finish	Chrome

Product Options

LED Colour:	White 2700°K
	White 3200°K
	White 4000°K
	Red
Lens Angle:	14°
	29°
	44°