Plutone TRG Spotlight

From
£135.16
Excl. Tax: **£112.63**

Product Images

Short Description

The Plutone spotlight range contains some of our most advanced LED technology. The Plutone TRG is a powerful fitting featuring a 5 watt LED module. The Nichia™ LED chip produces a very high quality LED output with an average colour rendering index of 95. The spotlight is waterproof from both the front and rear and is available in various lens angles and colour temperatures. The TRG model features an innovative FS SYSTEM fixing method which allows the product to be installed from the front of the panel and not the rear like many spotlights of this kind. A simple key can be used to remove the product from the front for easy maintenance.

- Interior & exterior spotlight with flange-less design
- Excellent anti-glare properties with recessed LED source
- Galvanised brass face, black painted
- Custom finishes available on request
- Tempered glass lens
- Anodised aluminium heatsink
- Multiple lens angles available
- FS SYSTEM fixing method - no need to prefit to ceiling panels
- Available in numerous white colour temperatures as well as red
- CRI>90

Description

- Drawing
- Product Information
- Photometric Performance
- FS System

Product Drawing

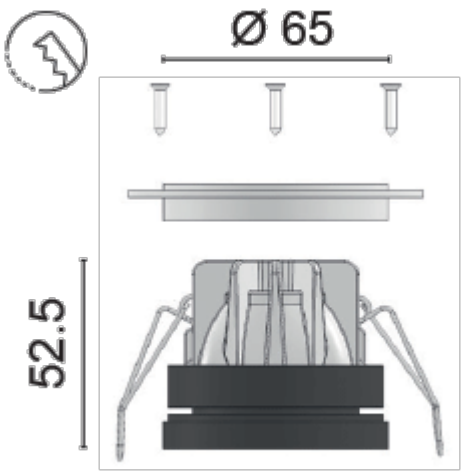

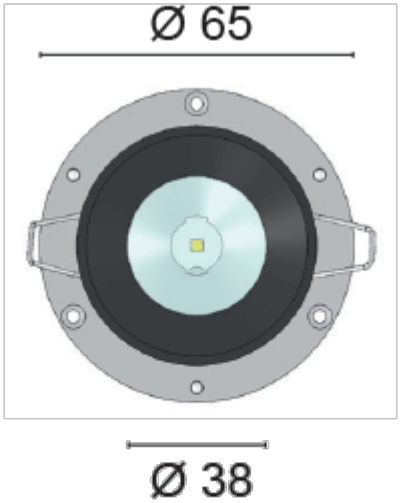

The Plutone spotlight has a deeper recess depth than other low voltage fittings in our range. This is caused in part by the anti-glare recessed light source, which sits deep within the light body, but also by the larger machined aluminium heat sink on the rear of the fitting. The size and performance of this heatsink has been carefully calculated in order to ensure that the LEDs operate at the optimal temperature for ultimate performance and longevity.

This luminaire features the FS installation system as found with all of our bezel-less designs. This innovative design makes initial installation and future maintenance hassle-free. Instead of having to remove ceiling panels or access the rear of the fitting as with many competitor products, the FS system means that the fitting can be installed and removed from the front using a simple wire key.

The product is secured in place using the spring clips featured on the back of the body. Before fitting the product, the machined aluminium backing ring must be installed to the rear of the ceiling panel in the correct orientation according to the panel thickness. Once this ring is installed, the panel can be secured in place. To fit the luminaire, simply make the electrical connection, retract the springs and insert the fitting into the cut-out. Release the springs carefully and allow the fitting to be pulled into position within the hole cut-out. This spring fit method offers an anti-vibration solution and a fast removal of the product for maintenance. The product will seat against the machined aluminium ring on the backside of the panel and fit securely and accurately.

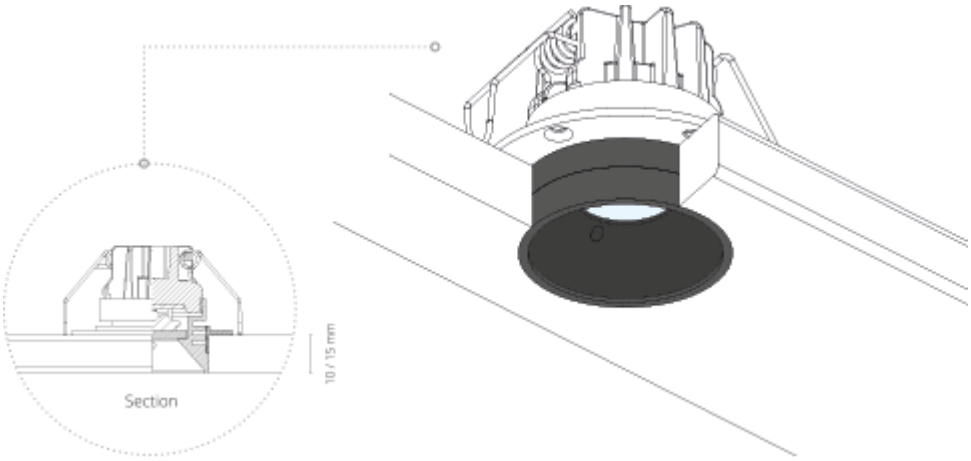

Please visit the FS System tab for further information

The Ultimate Low Voltage Spotlight

The Plutone spotlight range features the latest Nichia™ LED chip technology with a colour rendering index (CRI) of over 95. Available in a number of different lens angles and colour temperatures, the Plutone model offers a very high-end downlight solution for those seeking the very best.

Colour Rendering Index

Colour rendering index, more commonly referred to as CRI, is a quantitive measure of the ability of a light source to display the true colours of various objects in comparison to a natural light source such as daylight. The CRI of a light source does not indicate the colour of the light, this is referred to by the correlated colour temperature of a product commonly in Kelvin. The highest possible CRI of a luminaire is 100, which would be given to a fitting with a light source of the same spectrum as daylight.

Our Nichia™ chip fittings, have a published CRI of >90. In reality, the average CRI of our fittings has been laboratory tested at 95. This means that our LED down lights will bring out the very best in the fabrics, veneers and other finishes that they illuminate, revealing close to their true colours. The fittings become a key part of the interior design.

Separate Power Regulation

Our fittings offer a 10-30Vdc input. This is designed to make installation very straight forward for 12 or 24Vdc circuits such as those found on board a yacht. The 30Vdc upper limit also provides a level of security if a voltage spike were to occur. The separate voltage regulator mounted on the cable of the fitting regulates this input voltage and feeds the luminaire with the current required depending on the circuit board used. For those looking to fit the luminaires to a mains voltage 220-240 Vac circuit, a choice can be made between running the fitting on a 12Vdc or 24Vdc constant voltage power supply or, alternatively, powering the fitting directly with current following the safe removal of the regulator. The provides the best possible flexibility for those choosing our fittings, allowing them to be integrated in a wider variety of lighting schemes and powered accordingly.

Photometric Data

Narrow 14°

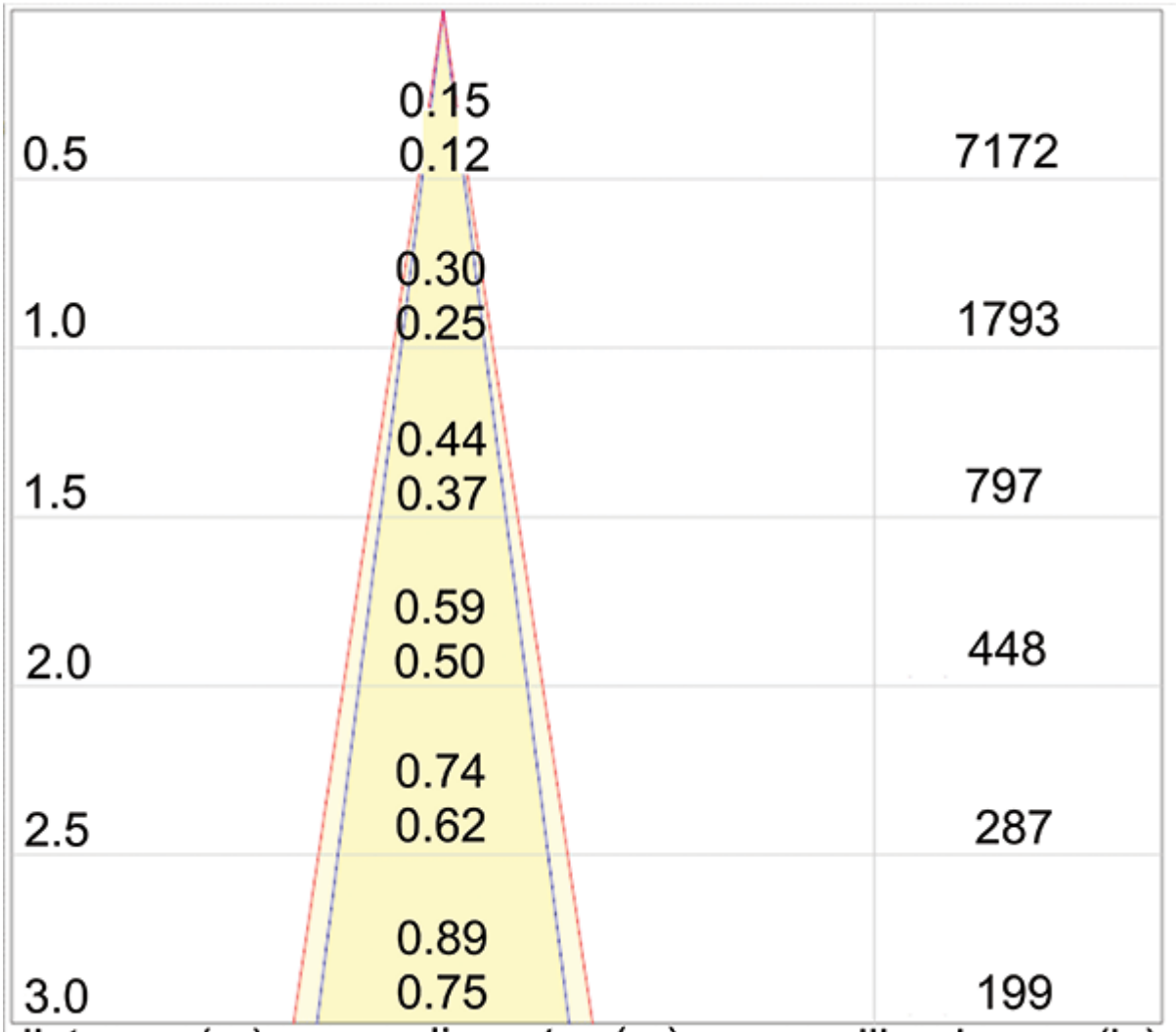

distance (m)	cone diameter (m)	illuminance(lx)
0.5	0.15 0.12	7172
1.0	0.30 0.25	1793
1.5	0.44 0.37	797
2.0	0.59 0.50	448
2.5	0.74 0.62	287
3.0	0.89 0.75	199

Narrow 14°

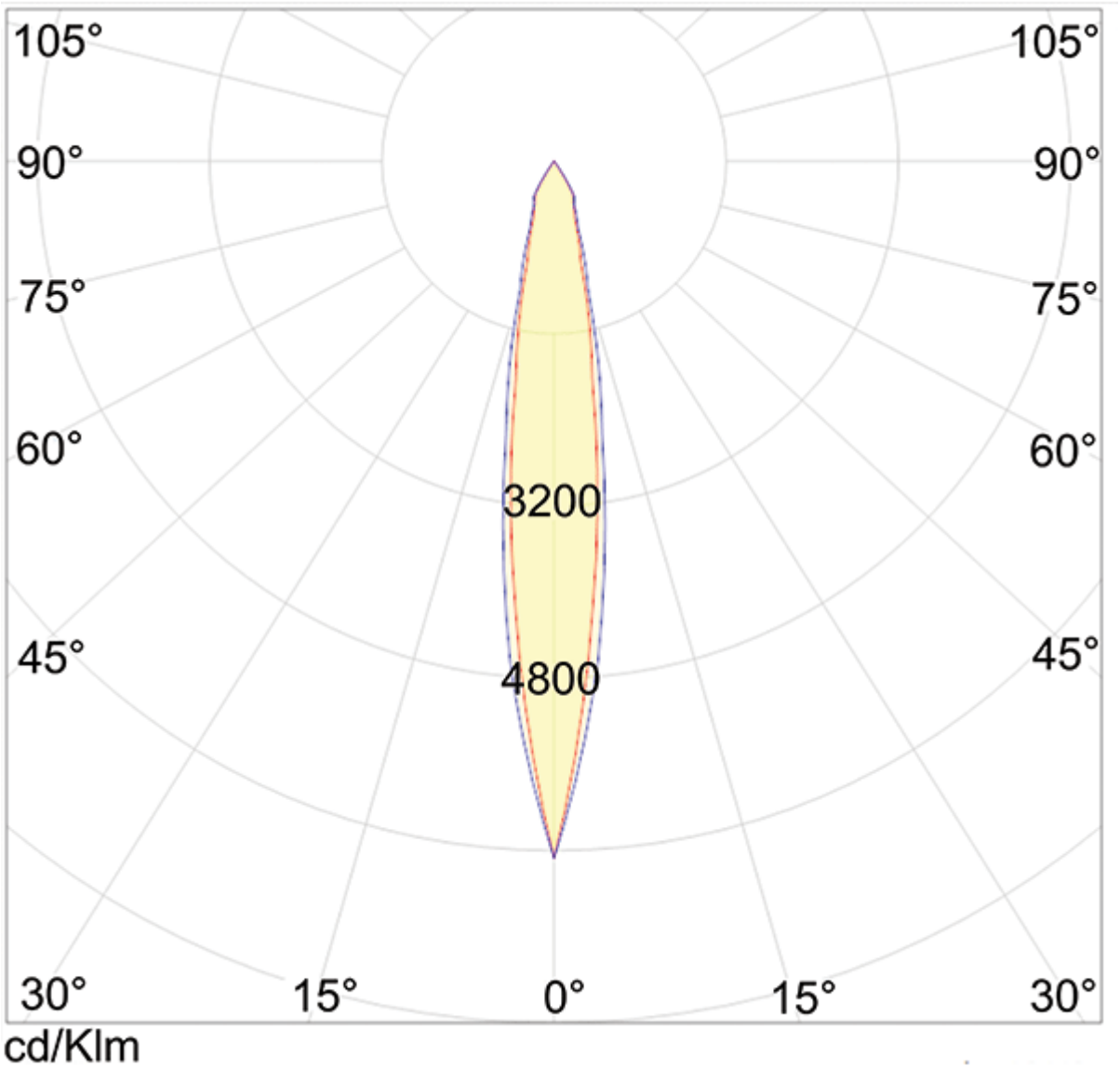

Standard 44

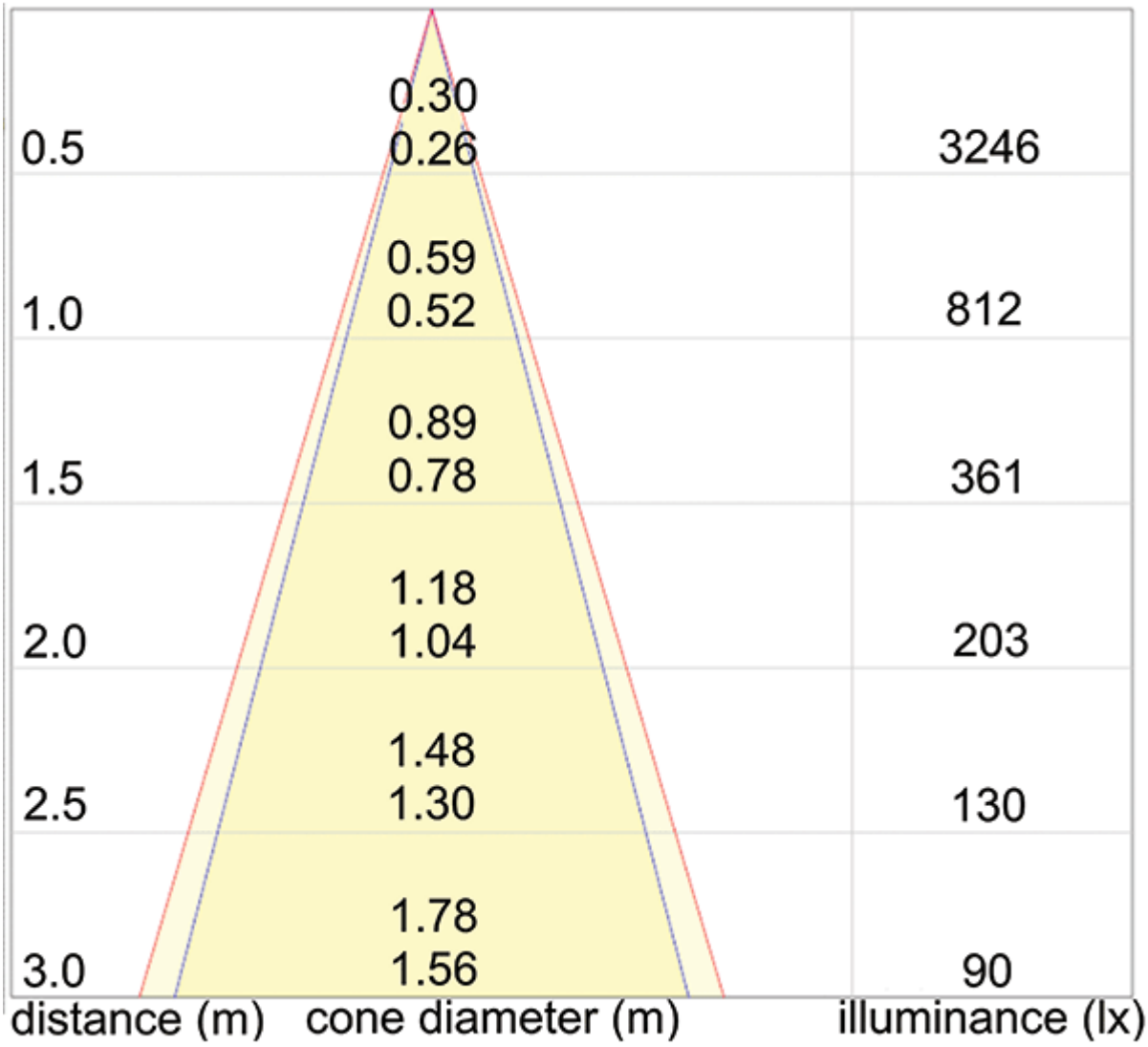
0.30
0.5
0.26
3246
0.59
1.0
0.52
812
0.89
1.5
0.78
361
1.18
2.0
1.04
203
1.48
2.5
1.30
130
1.78
3.0
1.56
90
distance (m)
cone diameter (m)
illuminance (lx)

Standard 44

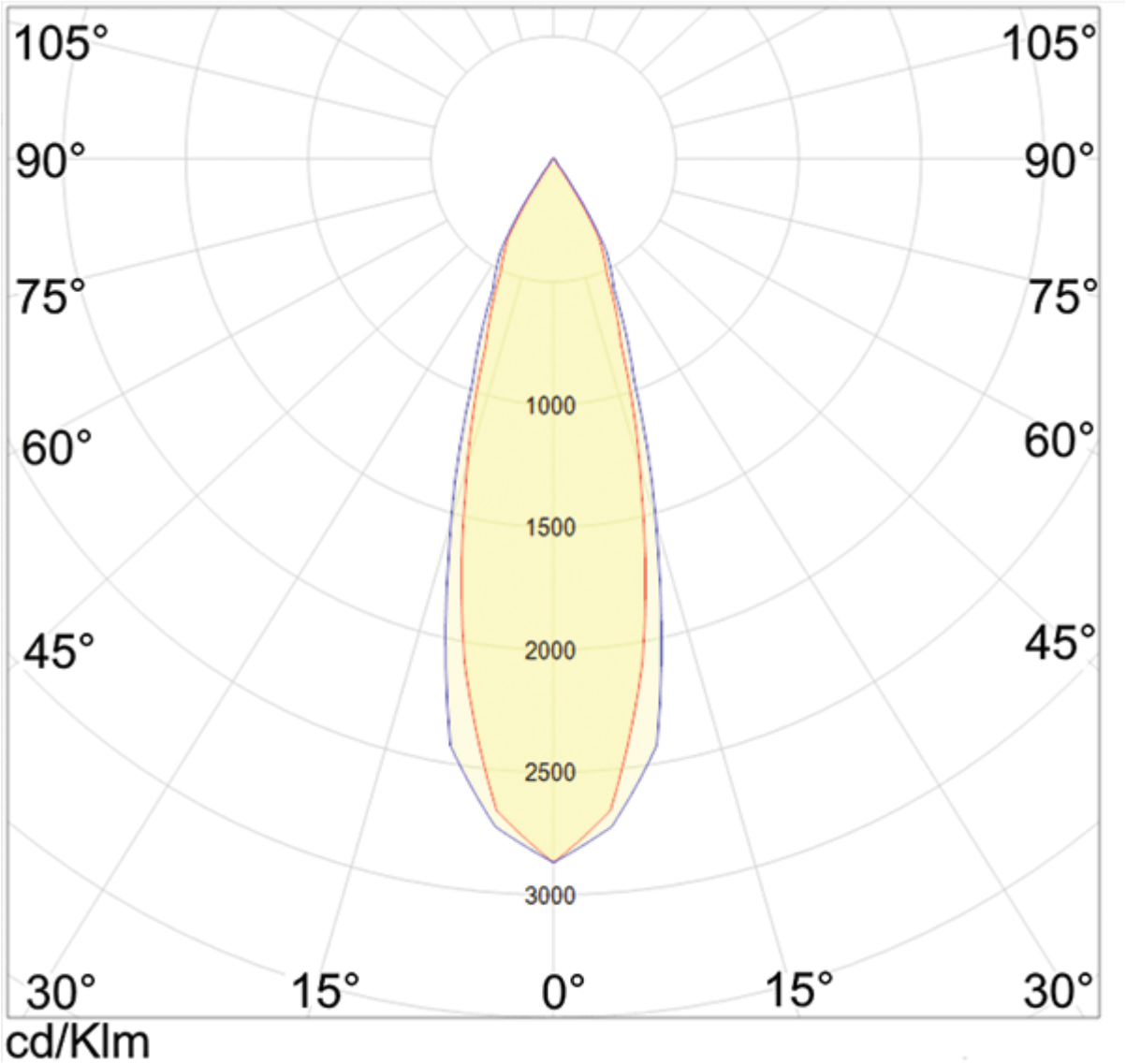
105°
105°
90°
90°
75°
75°
60°
60°
45°
45°
1000
1500
2000
2500
3000
30°
15°
0°
15°
30°
cd/Klm

Medium 29

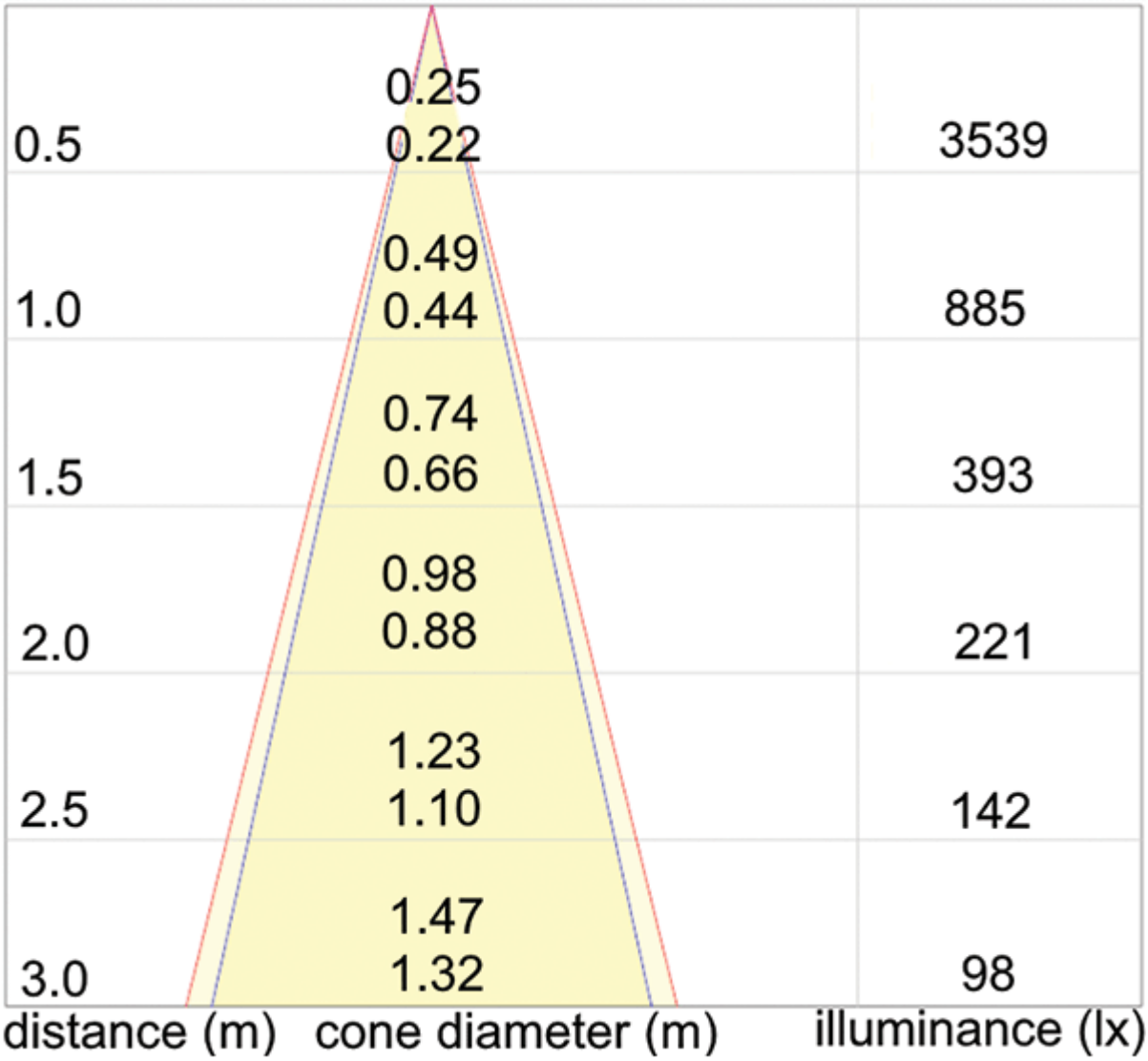
0.25
0.5
0.22
3539
0.49
1.0
0.44
885
0.74
1.5
0.66
393
0.98
2.0
0.88
221
1.23
2.5
1.10
142
1.47
3.0
1.32
98
distance (m)
cone diameter (m)
illuminance (lx)

Medium 29°

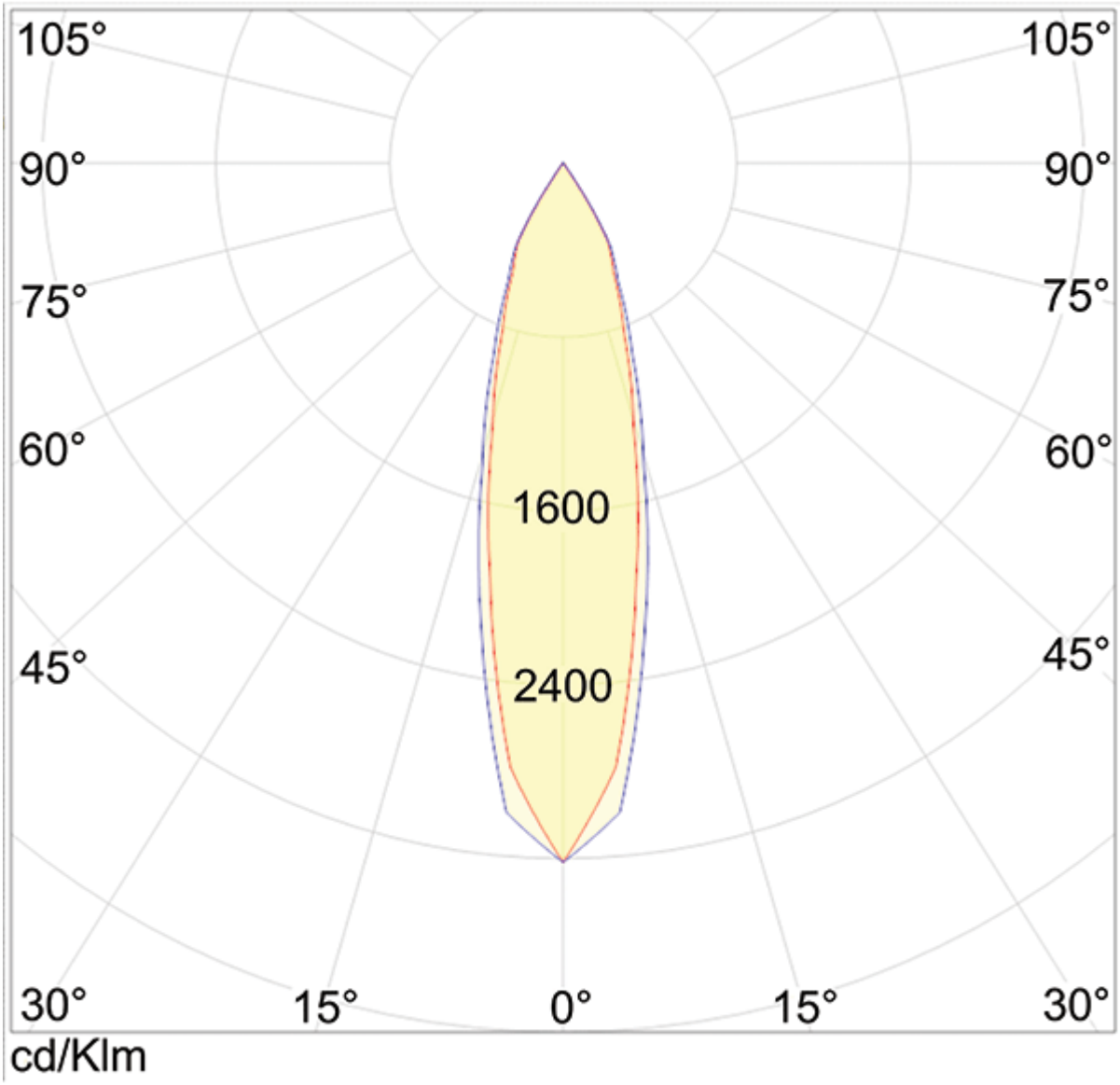

FS Installation System

The FS System is an installation system designed for the flush fitting of bezel-less spotlights to a panel. The system allows a spotlight to be installed from the front of the panel, only a simple installation ring needs to be affixed to the rear of the panel before the panel is secured in place. Once this ring is in position, all wiring, installation of fitting and future maintenance can be carried out from the front. A separate wire key is required to help with the removal of the fitting once installed (not included).

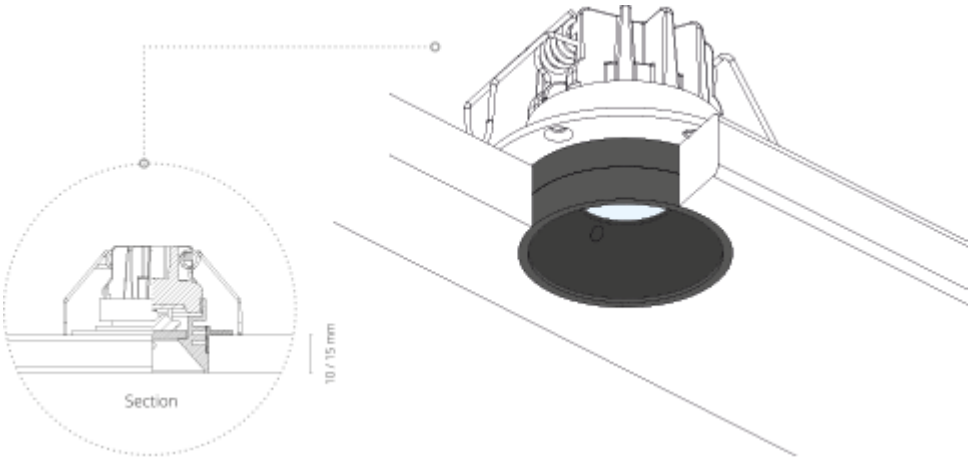

Installation

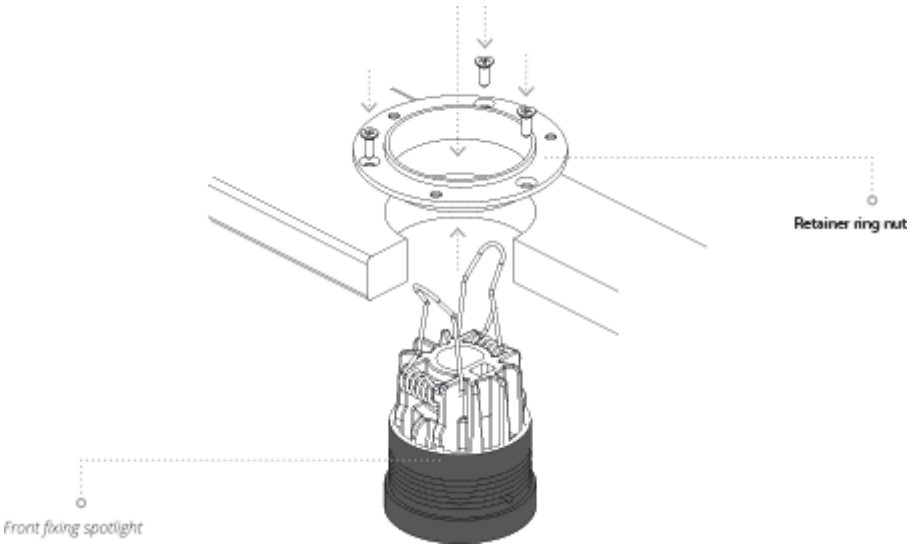

Extraction

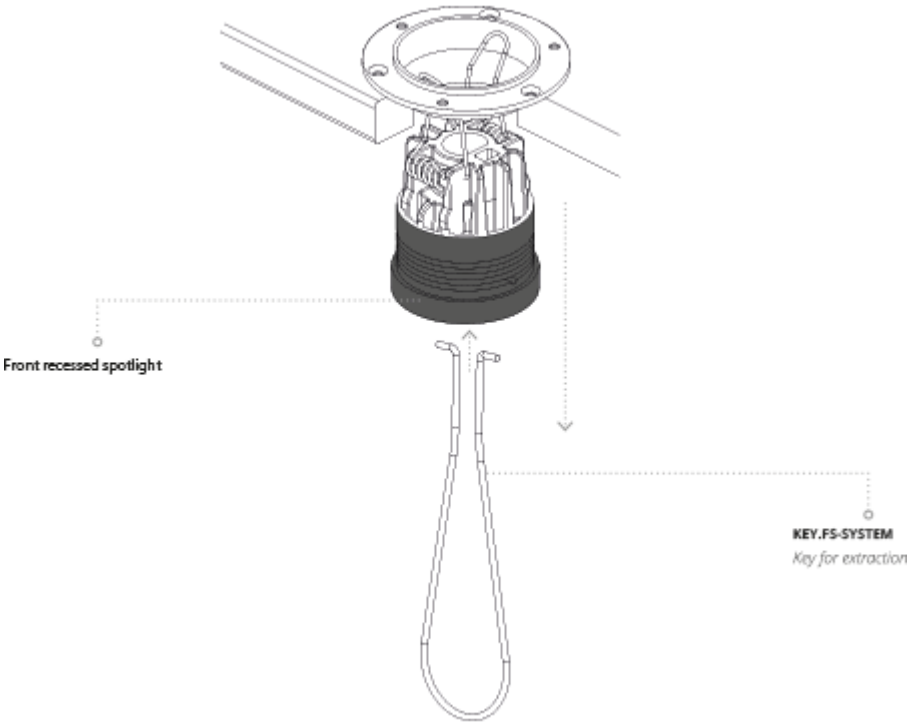

Additional Information

Weight (kg)	0.210000
Manufacturer	Foresti & Suardi
Installation	Recessed
Light Element Type	Power LED
Wattage	5W
CRI	>90
Input Voltage	10-30Vdc
IP Rating	IP65
Dimmer	Yes
Bezel Size (mm)	Ø65.00
Cut-out Size (mm)	Ø65.00
Depth (mm)	54.50
Finish	Black

Product Options

LED Colour:	White 2700°K
	White 3200°K
	White 4000°K
	Red
Lens Angle:	14°
	29°
	44°