# Hatch Hinge - Brass

Regular Price
**£11.98** Special Price
**£5.11**
Excl. Tax: **£4.26**

## Product Images

## Short Description

A pressure die cast brass hatch hinge.

## Description

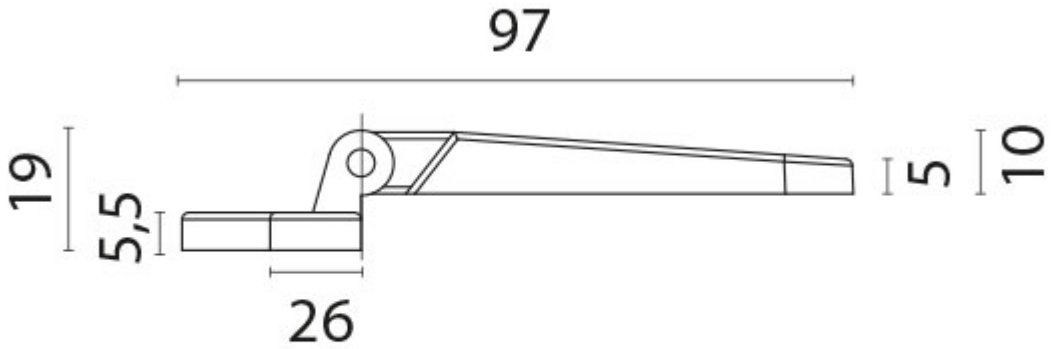


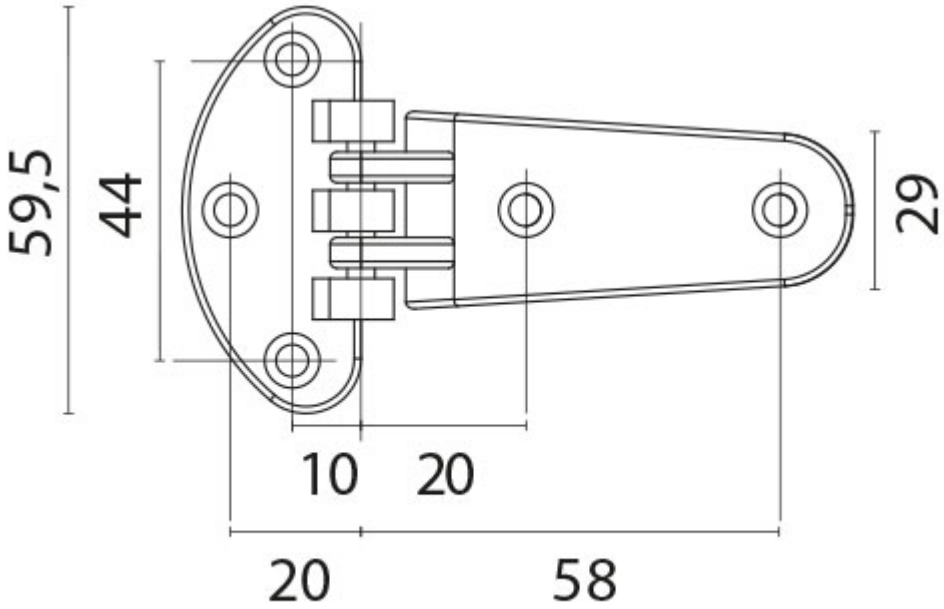

## Additional Information

| | |
|---|---|
| Length (mm) | 97 |
| Width (mm) | 59.5 |
| Max. Opening | 200° |
| Finish | Brass |
| Manufacturer | Foresti & Suardi |
| Weight (kg) | 0.100000 |