Tolomeo Custom Track Light

Product Images

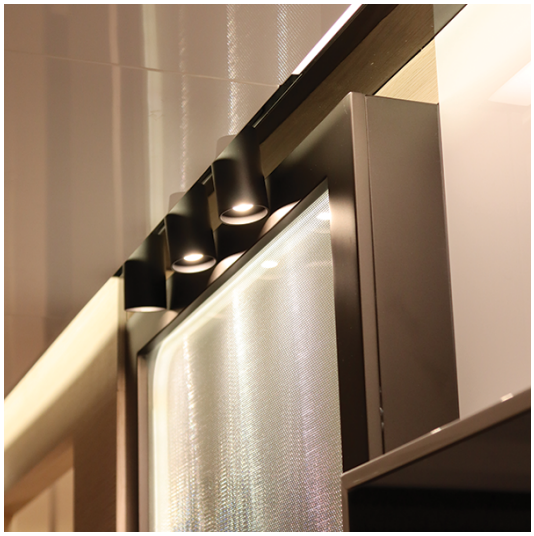

Short Description

A tailor-made track lighting solution for a wide variety of applications. *Tolomeo* can be customised in terms of length, finish and lighting elements in order to aesthetically compliment any interior space as well as provide the correct lighting levels.

The basis of the product is an anodised aluminium extrusion which can be produced in any desired length up to 2 metres. Various lighting modules are then available to install in the track which are available in numerous colour temperatures.

Multiple fixing methods can be used with *Tolomeo* including surface mounting and recessed solutions.

Tolomeo keeps to the marine-grade philosophy of all of our products and is suitable for use on yachts and in coastal locations.

Description

Components

Aluminium Track

The core element to the Tolomeo track light is the aluminium extrusion into which all the other elements fit. This is made from anodised aluminium and can be finished in any RAL colour (minimum order quantities may apply). Standard finishes are matt black RAL 9005 20% gloss and matt white RAL 9010 20% gloss. The track can be installed in either a recessed or surface mounted fashion. It is also possible to supply the track system with cable mounting points for a suspended installation.

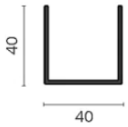

Recessed Installation

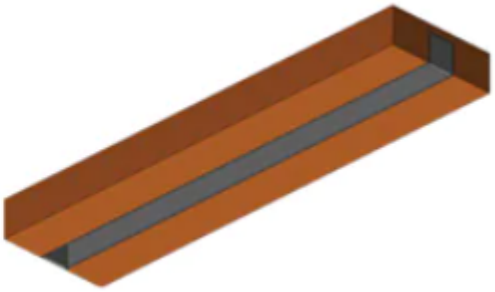

Surface Mounted Installation

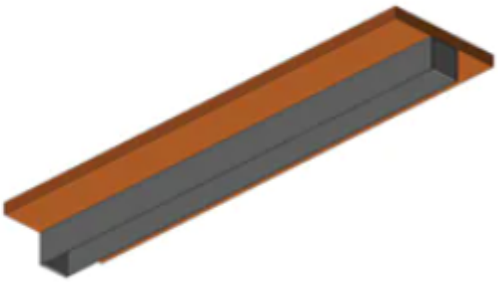

Light Elements

FAR.O.8460

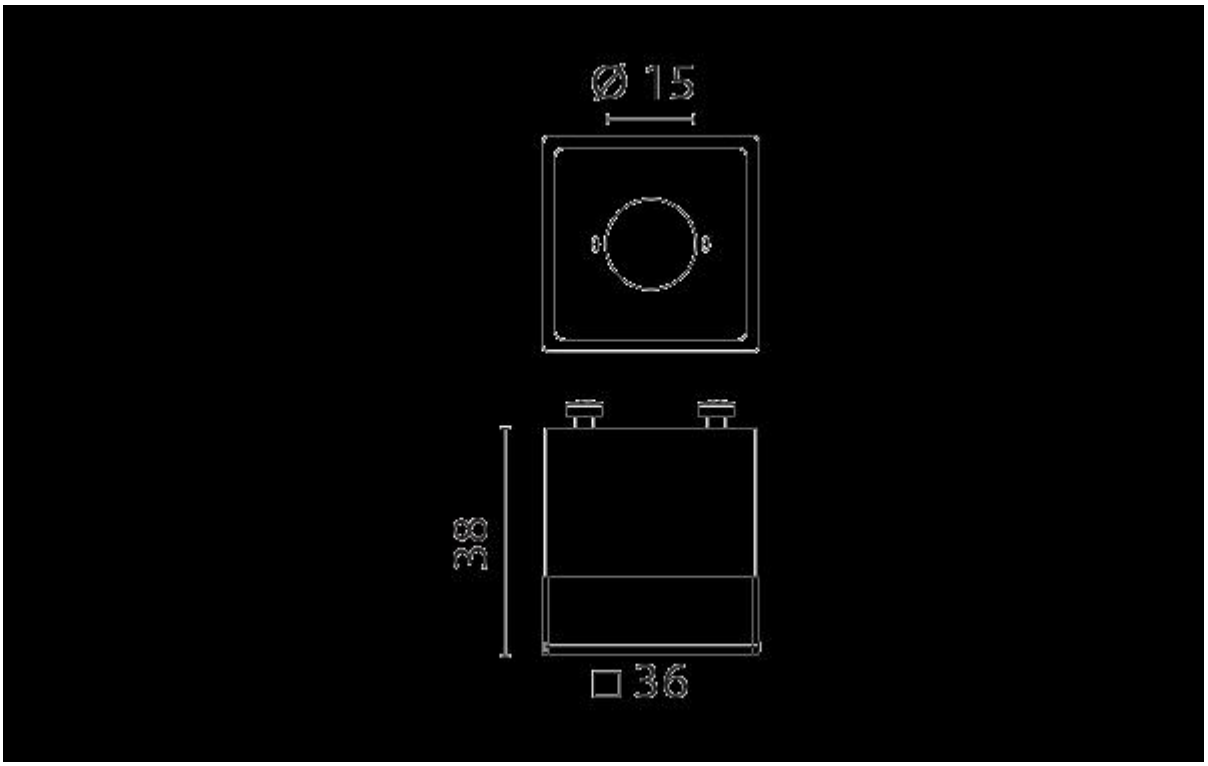

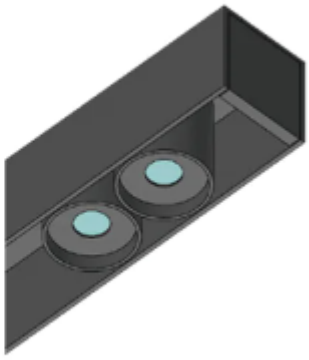

- Power LED fixed spotlight
- Various finishes available
- 2700, 3200, 4000k & red LED options
- 10/30 VDC
- 3 Watt
- Compatible with dimmer 6018
- CRI>90
- 31° lens angle

Example Finishes

Brushed Brass

Satin Chrome

Chrome

Black

FAR.O.8460

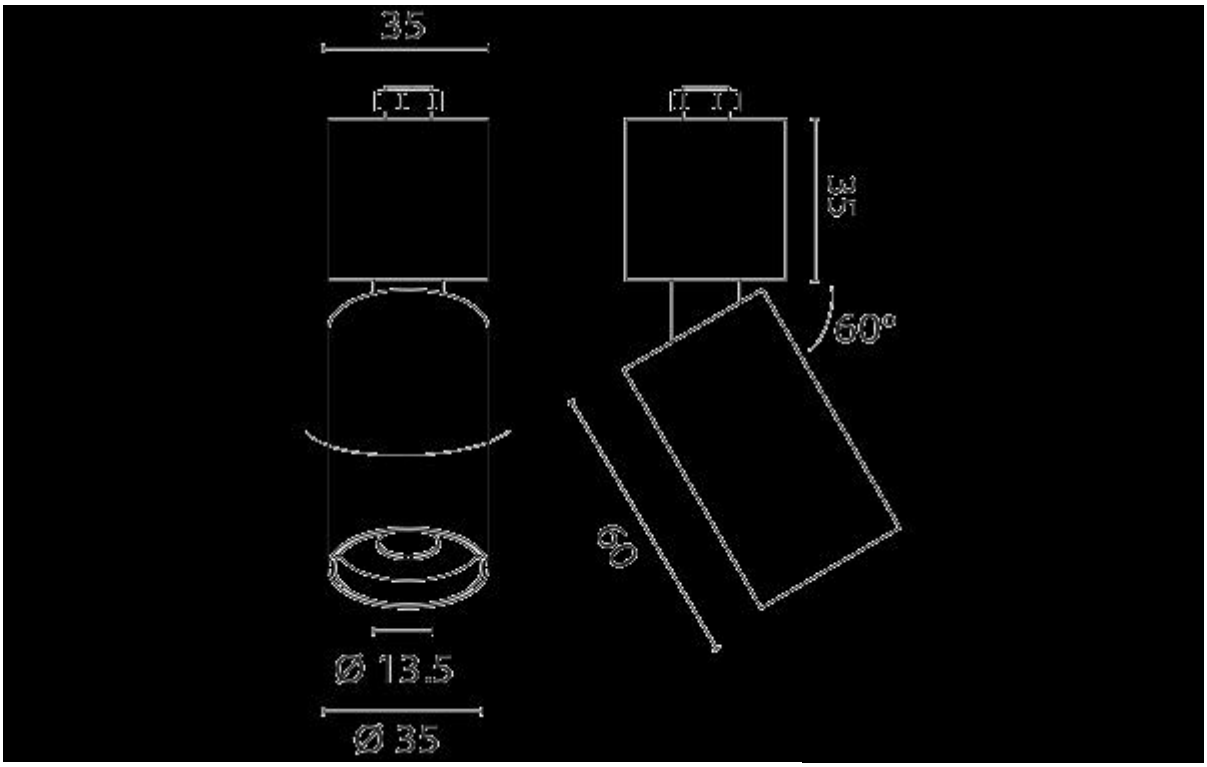

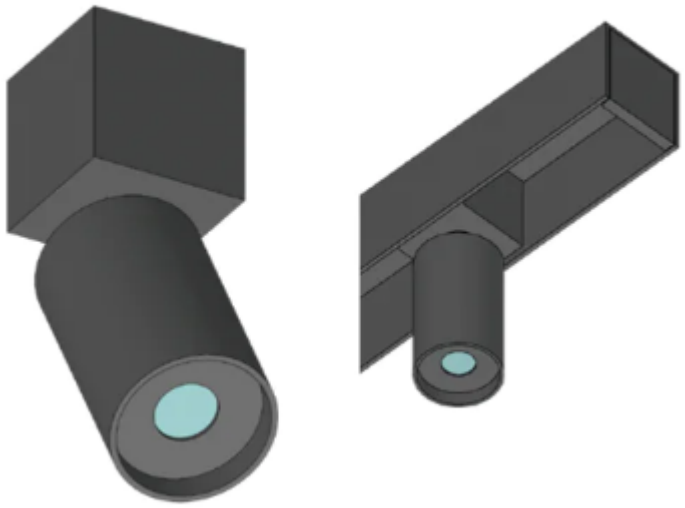

- Power LED adjustable spotlight
- Various finishes available
- 2700, 3200, 4000k & red LED options
- 10/30 VDC
- 3 Watt
- Compatible with dimmer 6018
- CRI>90
- 31° lens angle

Example Finishes

Brushed Brass

Satin Chrome

Chrome

Black

FAR.FQ.8460

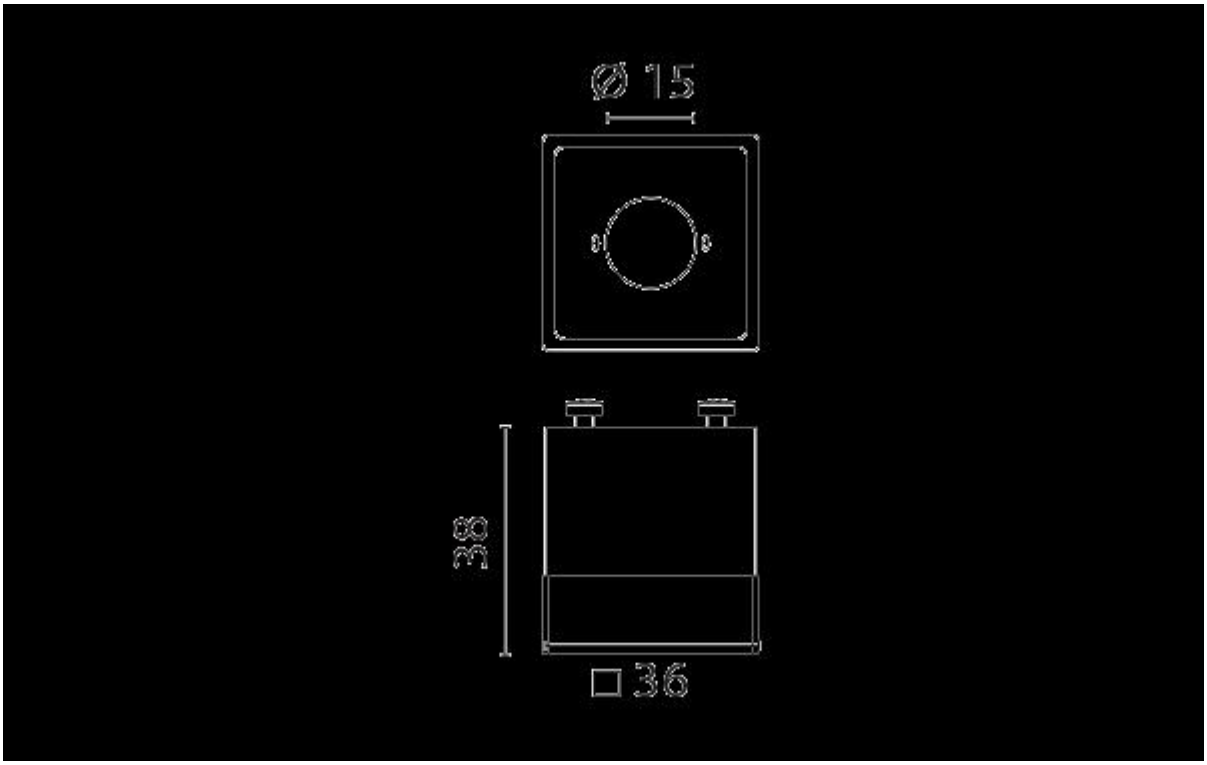

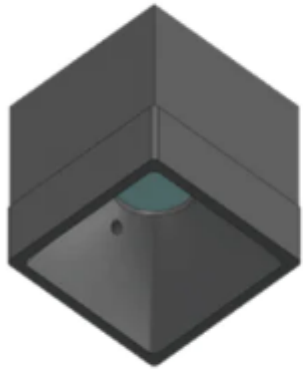

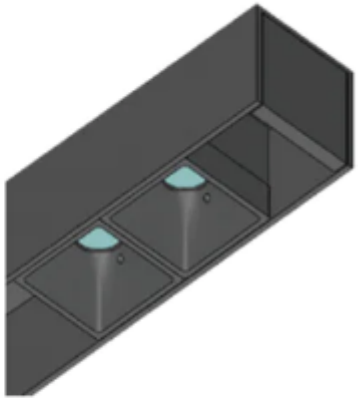

- Power LED spotlight
- Various finishes available
- 2700, 3200, 4000k & red LED options
- 10/30 VDC
- 3 Watt
- Compatible with dimmer 6018
- CRI>90
- 31° lens angle

Example Finishes

Brushed Brass

Satin Chrome

Chrome

Black

FAR.FV.8460

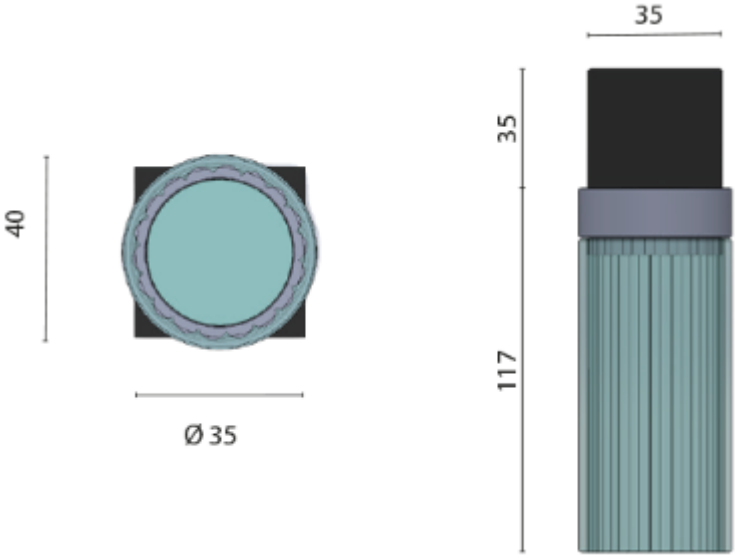

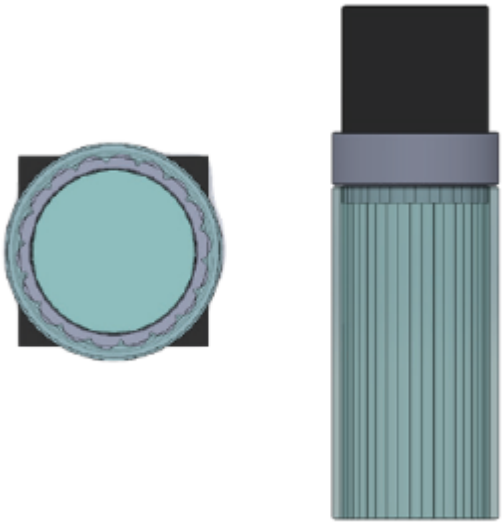

- Power LED fixed spotlight
- Chrome and black finish available
- 2700, 3200 & 4000k options
- 10/30 VDC
- 2 Watt
- Compatible with dimmer 6012
- CRI>90

Example Finishes

Chrome Black

FAR.OV.8460

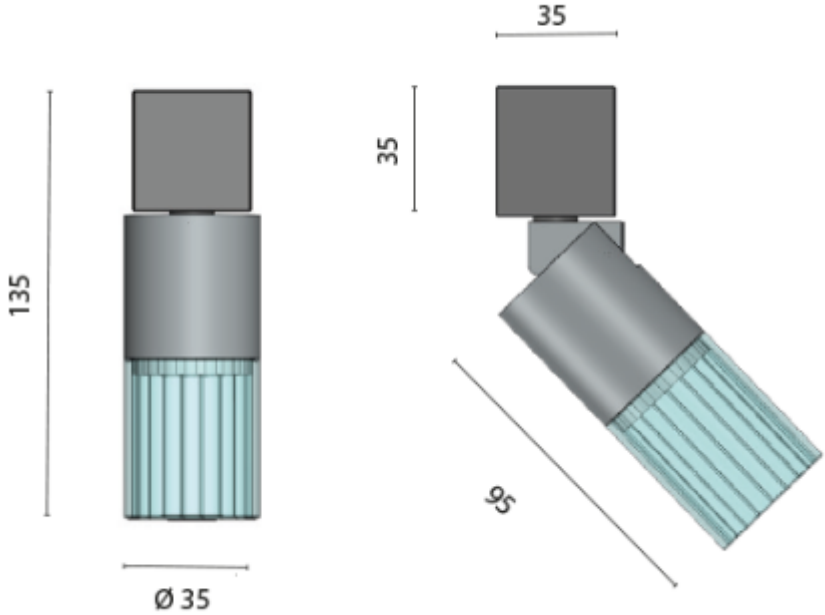

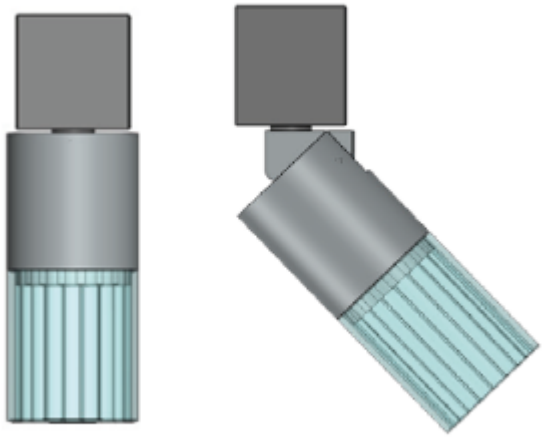

- Power LED adjustable spotlight
- Chrome and black finish available
- 2700, 3200 & 4000k options
- 10/30 VDC
- 2 Watt
- Compatible with dimmer 6012
- CRI>90

Example Finishes

Chrome Black

STRIP.Q.8460

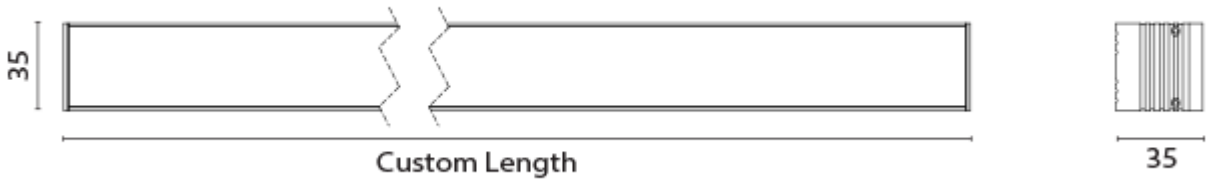

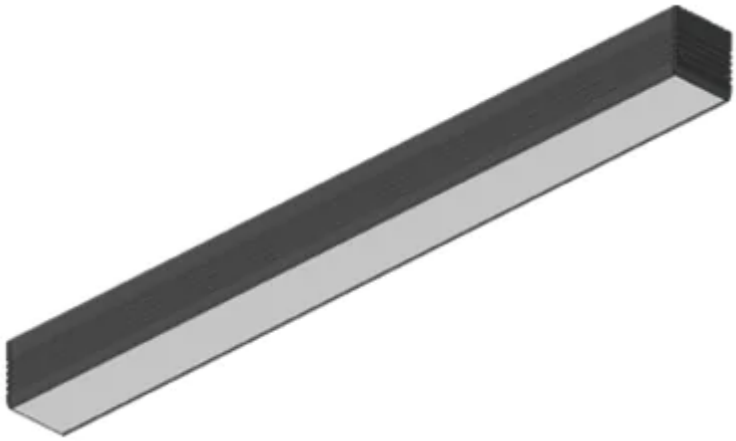

- White and black finish available
- 2700, 3200 & 4000k options
- 24-27 VDC
- 19 Watt/m
- Compatible with dimmer 6018
- CRI>90
- 120° lens angle

Example Finishes

Black White

STRIP.T.8460

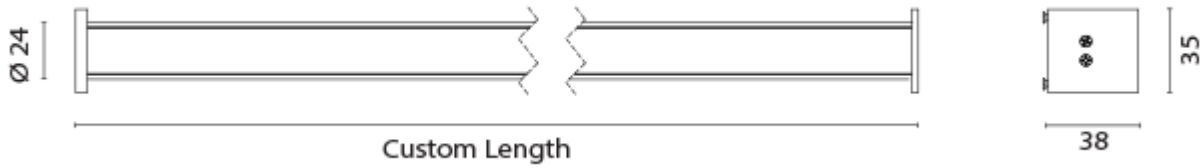

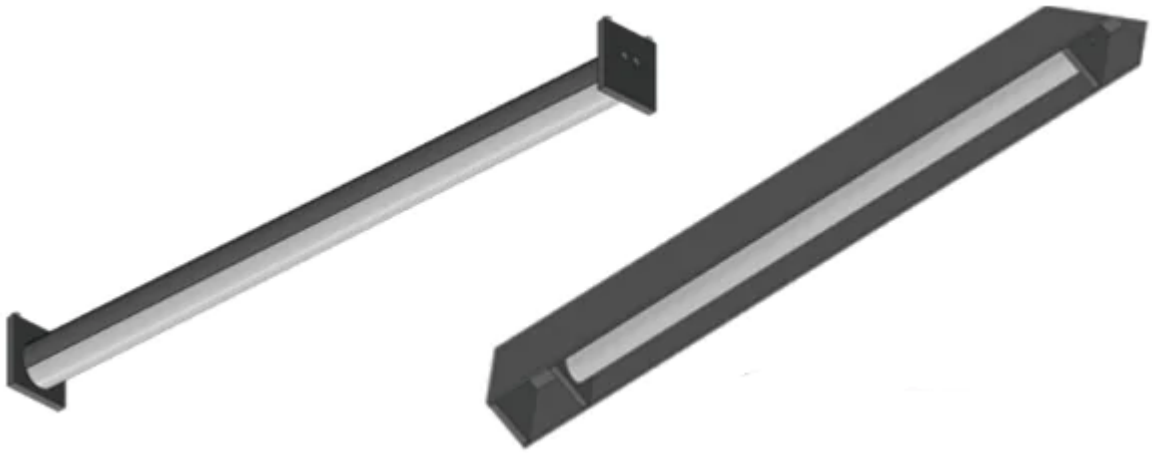

- White and black finish available
- 2700, 3200 & 4000k options
- 24-27 VDC
- 13 Watt/m
- Compatible with dimmer 6018
- CRI>90
- 120° lens angle

Example Finishes

Black White

SFE.OP.8460

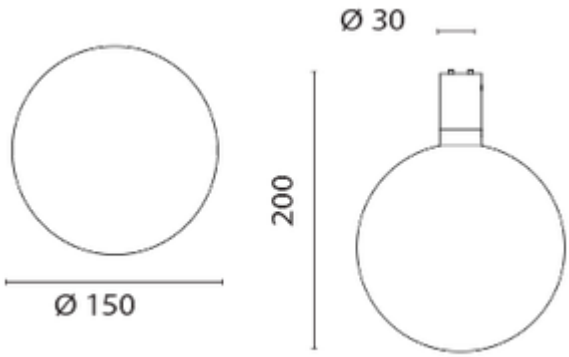

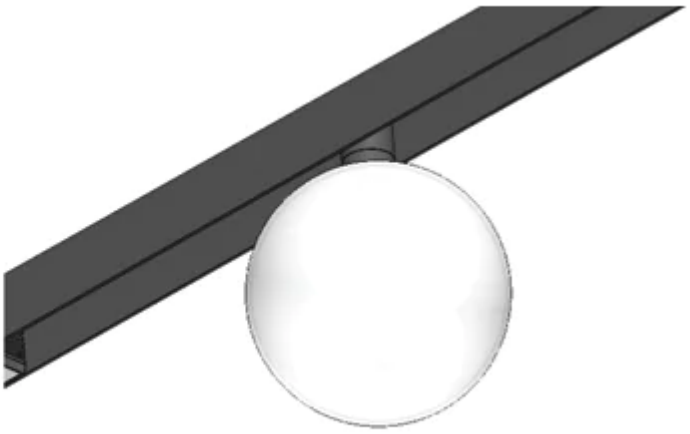

- 2700, 3200 & 4000k options
- 24-27 VDC
- 4.5 Watt
- Compatible with dimmer 6018

Components

- Aluminium Track

The core element to the *Tolomeo* track light is the aluminium extrusion into which all the other elements fit. This is made from anodised aluminium and can be finished in any RAL colour (minimum order quantities may apply). Standard finishes are matt black RAL 9005 20% gloss and matt white RAL 9010 20% gloss. The track can be installed in either a recessed or surface mounted fashion. It is also possible to supply the track system with cable mounting points for a suspended installation.

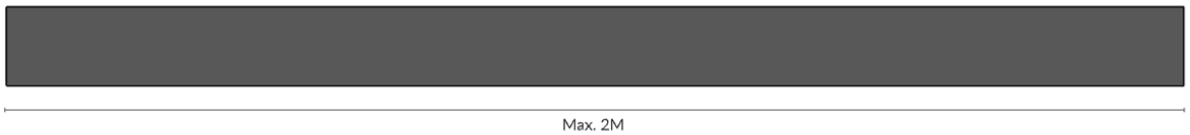

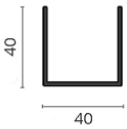

Recessed Installation

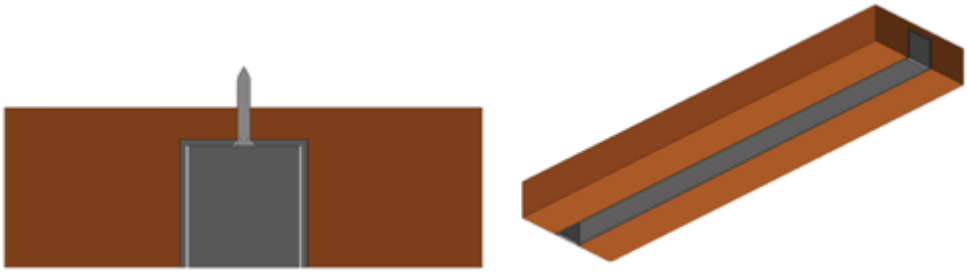

Surface Mounted Installation

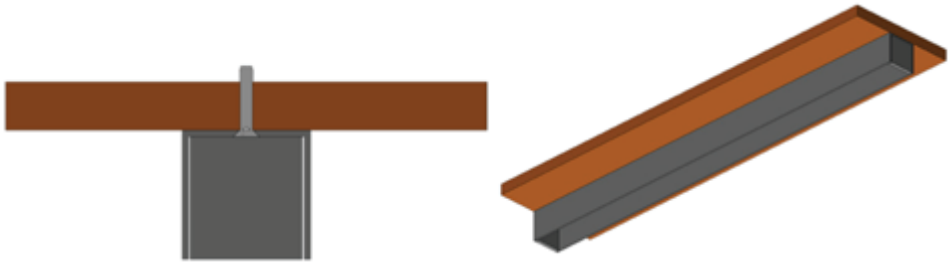

- Light Elements

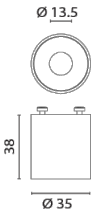

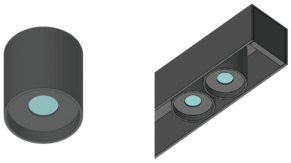

Power LED
FAR.F.8460.2700.9
FAR.F.8460.3200.9
FAR.F.8460.4000.9
FAR.F.8460.R

10/30 VDC
3 Watt
Dimmer 6018

CRI>90
31° Lens angle

Example Finishes

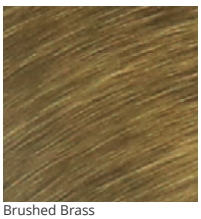
Brushed Brass

Satin Chrome

Chrome

Black

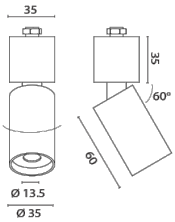

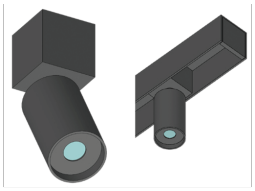

Power LED
FAR.O.8460.2700.9
FAR.O.8460.3200.9
FAR.O.8460.4000.9
FAR.O.8460.R

10/30 VDC
3 Watt
Dimmer 6018

CRI>90
31° Lens angle

Example Finishes

Brushed Brass

Satin Chrome

Chrome

Black

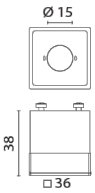

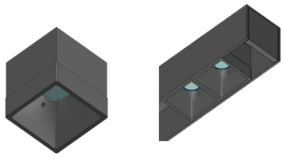

Power LED
FAR.FQ.8460.2700.9
FAR.FQ.8460.3200.9
FAR.FQ.8460.4000.9
FAR.FQ.8460.R

10/30 VDC
3 Watt
Dimmer 6018

CRI>90
31° Lens angle

Example Finishes

Brushed Brass

Satin Chrome

Chrome

Black

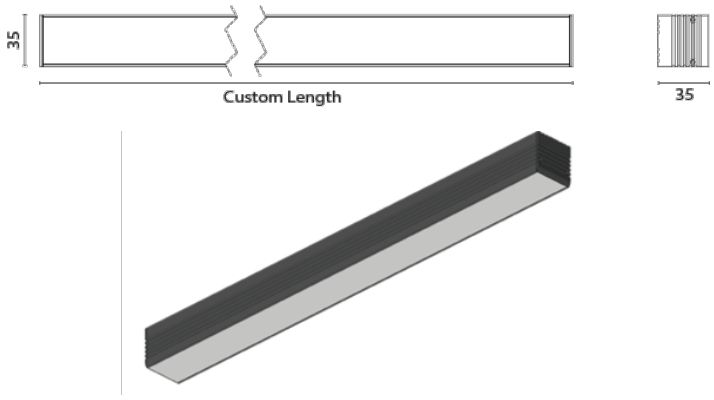

Power LED
STRIP.Q.8460.2700
STRIP.Q.8460.3200
STRIP.Q.8460.4000

24-27 VDC
19 Watt/Mt
Dimmer 6018

CRI>90
120°
Lens angle

Example Finishes

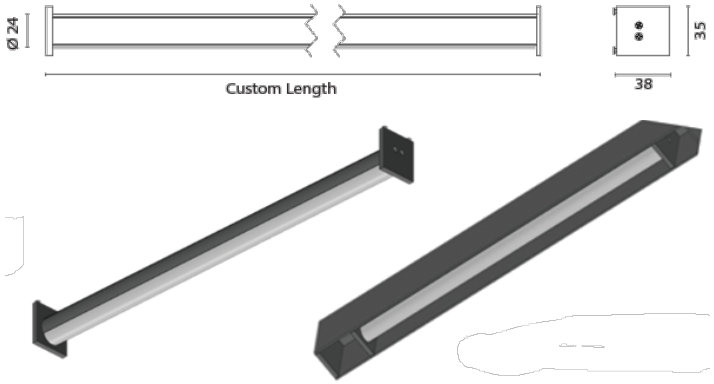

Power LED
STRIP.T.8460.2700
STRIP.T.8460.3200
STRIP.T.8460.4000

24-27 VDC
13 Watt/Mt
Dimmer 6018

CRI>90
120°
Lens angle

Example Finishes

Power LED
SFE.OP.8460.2700
SFE.OP.8460.3200
SFE.OP.8460.4000

24-27 VDC
4,5 Watt
Dimmer 6018

Additional Information

Manufacturer	Foresti & Suardi
Light Element Type	Power LED
Input Voltage	24-28Vdc
IP Rating	IP20
Dimmer	Yes