Tank Air Vent - Straight

£10.22

Excl. Tax: **£8.52**

Product Images

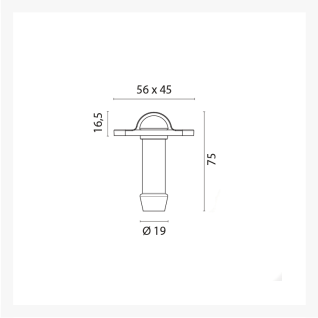

Short Description

A pressure die cast brass tank air vent with anti-flame gauze. This product is supplied in a chrome plated finish and features a Ø19mm hose connection.

Description

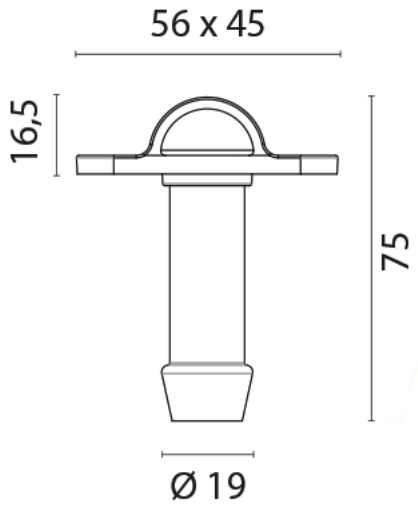

Additional Information

Weight (kg)	0.100000
Manufacturer	Foresti & Suardi
Finish	Chrome
Hose Connection	Ø19mm