Small Spider Hinge

£296.88

Excl. Tax: **£247.40**

Product Images

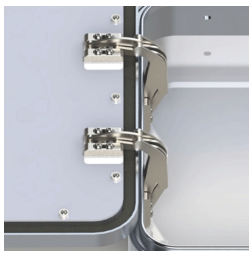

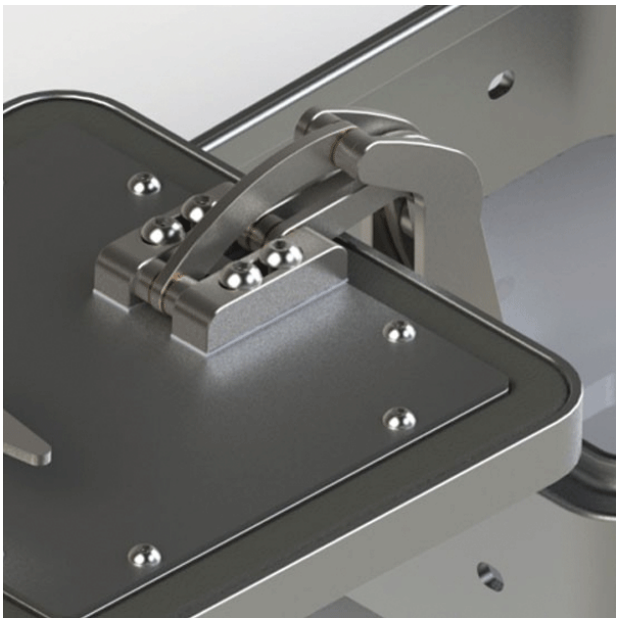

Compact version with pin pictured

Compact version with pin pictured

Short Description

316-grade stainless steel spider hinge for doors, hatches and bulwark doors. This an exclusive patented product with high-end technical features. The choice of materials, such as AISI 316 stainless steel and bronze, ensure durability and high resistance to corrosion and wear as well as ultimate performance.

The hinge can function on both horizontal and vertical applications opening up to 178° and allowing the hatch lid or door to open completely flat against the deck or bulkhead.

Drawing

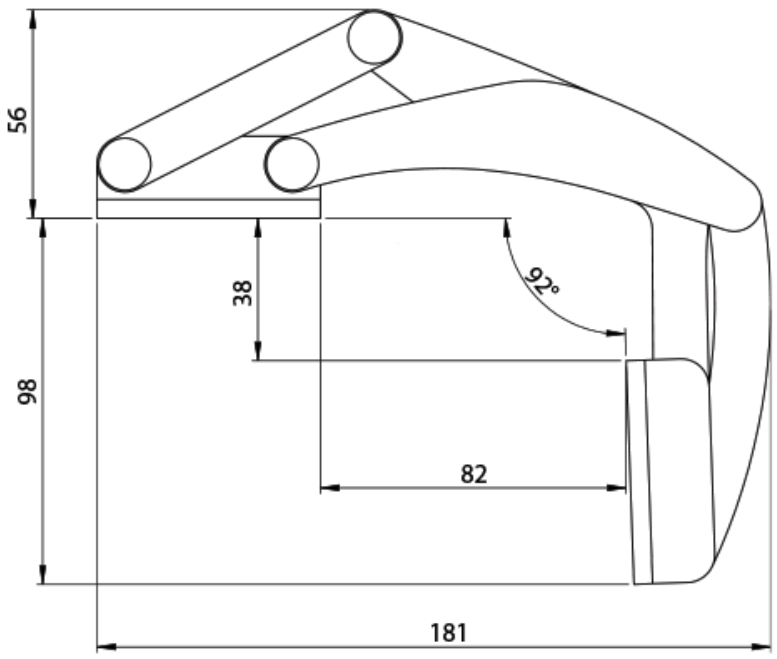

Dimension shown - fully open. For more detailed dimensional information please consult downloadable 2D PDF drawing under 'Product Attachments'

Maximum Weight Capacity

The following calculations have been carried out in order to help demonstrate the load bearing capacity of the spider hinge. For the purposes of the calculations, a 600mm x 600mm panel has been used with 450mm spacing between hinges when using 2 or 4 hinges coupled two by two. Please note that the test has been carried out on a vertically hung panel which causes the greatest strain on the hinges. A horizontally opening panel with our spider hinges would result in far greater maximum weight capacity figures.

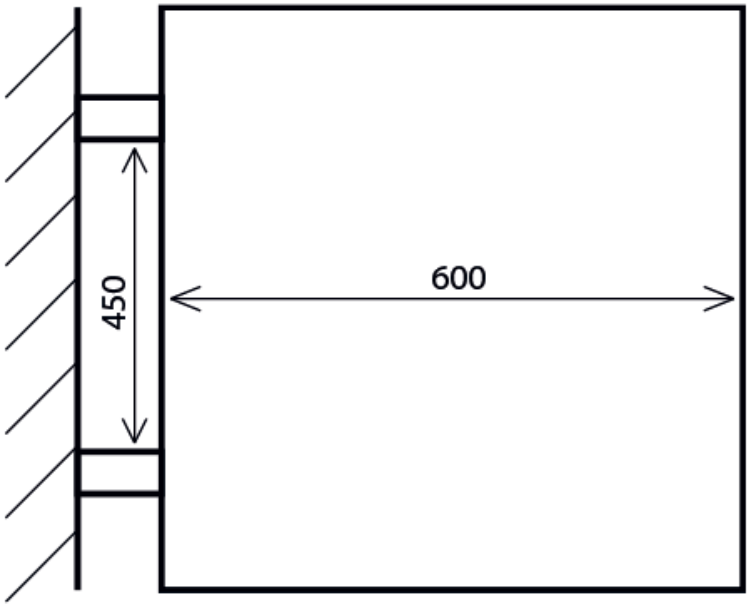

Hinge Model	2 Hinges	4 Hinges
CRI-01-SS - Compact	60kg	120kg
CRS-01-SS - Small	60kg	120kg
CRM-01-SS - Medium	150kg	300kg
CRB-01-SS - Big	210kg	420kg
CRSI-01-SS - Slim	20kg	40kg
CRBS-01-SS - Big Slim	75kg	150kg
CRBSS-01-SS - Big Simplified	70kg	140kg

Additional Information

Max. Opening	178°
Finish	316 Stainless Steel
Weight (kg)	1.025000